ANNEX VI

PROTOCOL OF AGREEMENT BETWEEN THE GOVERNMENT OF THE REPUBLIC OF RWANDA AND THE RWANDESE PATRIOTIC FRONT ON THE INTEGRATION OF THE ARMED FORCES OF THE TWO PARTIES

The Government of the Republic of Rwanda on the one hand, and the Rwandese Patriotic Front on the other;

Agree on the following provisions on the integration of the Armed Forces of the two parties.

CHAPTER I. THE NATIONAL ARMY.

Section 1: Missions and Principles.

Article 1: Subject to modalities and principles mutually agreed upon between the two parties in the present Protocol of Agreement, for the formation of the National Army, the latter shall fulfil the following missions and shall be guided by the principles below:

A. Missions:

1. Defend the national territorial integrity and the sovereignty of the country;

2. Participate, within the framework established by laws and regulations and in consultation with relevant authorities, in

/...

operations of maintenance and restoration of law and order as well as in the execution of laws;

3. Participate in relief operations in the event of natural calamities;

4. Contribute to the development of the country, especially through reconstruction and production activities.

B. Principles.

1. As an Institution, the National Army shall be governed by the laws and regulations of the country;

2. The National Army shall be at the disposal of the Government and shall be subordinated to its authority, the two institutions abiding by the Fundamental Law as defined in the Peace Agreement, laws, democratic principles and the Rule of Law;

3. The National Army shall be non partisan;

4. The National Army shall be a regular Army, composed solely of volunteer Rwandese citizens recruited on the basis of their competence. It shall be open to any Rwandese Nationals, irrespective of their ethnic group, region, sex, religion or language;

5. Members of the National Army shall have the right to be informed about the socio-political life of the country. They shall benefit from civic and political education . To that effect, the Government shall set up a programme for the civic and political education of servicemen;

6. Members of the National Army shall not be affiliated to political parties or to any other association of a political nature. They shall

/...

neither take part in activities or demonstrations of political parties or associations. They shall not portray their political allegiances in public;

7. Members of the National Army shall exercise their right to vote. Given the type of the current organization of the Army, however, its members cannot participate in local elections.

8. Members of the National Army may present their candidature for political elective posts, on condition that they resign from the Army.

Section 2: Size, Structure and Organization.

Sub-Section 1: Size.

rticle 2: The strength of the National Army (Officers, Non-Commissioned Officers, Corporals and Privates) shall be thirteen thousand (13,000) men.
The ratio between the various categories with respect to the whole size of the Army, shall be 6% for Officers, 22% for Non-Commissioned Officers and 72% for men.

Sub-Section 2: Structure.

rticle 3:

The National Army shall comprise:

1. An Army Command High Council;

2. The Army Headquarters;

3. Four (4) Territorial Brigades;

4. Specialised Units under the Army Headquarters;

/...

5. Support and Service Units under the Army Headquarters.

The Organizational Chart indicating the structure of the National Army is reproduced as Annex I of the present Protocol and is an integral part of it.

Sub-Section 3: Organization.

Paragraph 1: The Army Command High Council.

Article 4: An Army Command High Council (ACHC) is hereby established and shall, in line with the policy set by the Government, be the highest military organ of consultation and decision-making for matters related to defence and the organization of the Army. It shall be accountable to the Government through the Minister of Defence.

Article 5: Composition.

The Army Command High Council shall be composed of :

-The Chief of Staff of the National Army:	Chairman
-The Deputy Chief of Staff of the National Army:	Vice-Chairman
-Brigade Commanders (4):	Members
-Second in Command of Brigades (4):	Members

Article 6: Functions.

The Army Command High Council shall exercise the following functions:

1. Study modalities of implementing the Government policy in matters of defence.

/...

2. Ensure the execution of the defence policy of the country.

3. Set up, in line with the Government general policy, a doctrine of utilization of the Army by establishing mechanisms and strategies for the defence of the national territory as well as the maximum utilization of resources.

4. Approve plans for the utilization of the Army.

5. Draw guidelines for the organization of the supply of logistics.

6. Provide advice, either on its own initiative or upon the request of the Minister of Defence, on defence policy plans, the overall organization of the Army, the state of military service and on any military issue of general concern.

7. Ensure the implementation of the organisation plan of the Army.

8. Study major issues confronting the Units and take decisions to be implemented by the Army headquarters or make recommendations to the Minister of Defence for appropriate action.

9. Supervise the process of formation of the National Army.

Article 7: Meetings.

The Army Command High Council shall meet once a month in an ordinary session upon convocation by its Chairman.

The Chairman may call for an extraordinary session when and as needed, and especially on instruction from the Minister of Defence, or at the request of anyone of its members.

/...

The agenda of the meeting shall be specified upon notification to attend.

rticle 8: Mode of Decision -Taking.

Decisions shall be taken by consensus and communicated to the Minister of Defence.

Decisions or recommendations by the Army Command High Council shall be conveyed to the echelons concerned through the Army Chief of Staff.

rticle 9: Rules of Procedure.

The Army Command High Council shall establish its own rules of procedure.

aragraph 2: The Army Headquarters.

rticle 10: Functions of the Army Headquarters.

The Army Headquarters shall have the following functions, exercised in conformity with directives of the Army Command High Council:

1. Day-to-day administration and command of the Army;
2. Co-ordinate the activities of Army and those of the Army Headquarters;
3. Implement decisions of the Army Command High Council;
4. Liaise, at the administrative level, between the Army - as an Institution - and the Government, through the Ministry of Defence;
5. Conduct, under the supervision of the Army Command High Council, the process of formation of the National Army, and

/...

participate, within the framework of implementation of the Peace Agreement, and in collaboration with the International Neutral Force or the NMOG, in the demobilization process, taking the respective missions and status of those Institutions into consideration.

rticle 11: Command of the Army Headquarters.

The Army Headquarters shall be under the command of the Chief of Staff, assisted by the Deputy Chief of Staff.

The Chief of Staff shall be responsible for the Army Headquarters. However, all the decisions shall be taken upon mutual agreement between the Chief of Staff and the Deputy Chief of Staff. The Deputy Chief of Staff shall be especially responsible for the supervision of activities of Departments 2 and 3 of the Army Headquarters. He shall be accountable to the Chief of Staff. He shall replace him in all the matters, in the event of his absence or impediment.

rticle 12: Organization and Functions of Army Headquarters Departments.

The Army Headquarters shall be composed of four Departments with the following functions:

1. Department 1 (G1): Management of personnel.

2. Department 2 (G2): Security and Military Intelligence.
   - Security of the personnel and equipment of the National Army;
   - Gathering and utilization of Intelligence.

3. Department 3 (G3): Organization, training, operations, civic and political education.
   - Set up of the doctrine of utilization of the National Army.

/...

- Proposal on the organizational structure and deployment of the Units;
- Military training and education;
- Civic and political education;
- Elaboration of military defence plans;
- Planning of daily and periodic activities of the National Army.

4. Department 4 (G4): Logistics.
   - Participation in preparing the budget;
   - Providing Units with supplies;
   - Management of the National Army patrimony.

Paragraph 3: Territorial Brigades.

rticle 13: Territorial Brigades shall be made up of three Battalions each and deployed as follows:

- 1st Brigade to cover Byumba Prefecture;
- 2nd Brigade to cover Kigali, Kibungo and Gitarama Prefectures;
- 3rd Brigade to cover Butare, Gikongoro and Cyangugu Prefectures;
- 4th Brigade to cover Kibuye, Gisenyi and Ruhengeri Prefectures.

Paragraph 4: Specialized Units under the Army Headquarters.

rticle 14: There are Specialized Units under the Army Headquarters, namely:

- A Para-commando Battalion;
- A Reconnaissance Battalion;

/...

- A Military Police Battalion whose detachments shall be deployed in the various Brigades, with only two Companies remaining in Kigali.

Paragraph 5: Support and Service Units under the Army Headquarters.

rticle 15:

There are Support and Service Units under the Army Headquarters, namely:

- An Engineering Battalion;
- A Field Artillery Battalion;
- An Anti-Aircraft Artillery Battalion;
- An Air Force Squadron;
- A Logistics Center;
- Medical Services;
- An Army Band Company;
- The Training Center in Bugesera;
- The Commando Training Centre in Bigogwe.

Paragraph 6: Schools.

rticle 16:

There are also Schools under the Ministry of Defence, namely:

- "Ecole Supérieure Militaire" (ESM) - Staff College
- "Ecole des Sous-Officiers" (ESO) - Military Academy.`

Programmes of study followed in these Schools shall be worked out by a Commission set up by the Government at the proposal of the Minister of Defence and shall be composed of Officers designated by the Army Command High Council and the Command Council of the National

/...

Gendarmerie as well as representatives of other concerned Departments. These programmes shall be approved by the Government.

ection 3: Service within the National Army.

ub-Section 1: The Military Service.

rticle 17: Principle.

Military service shall be exercised under contract or permanent terms. Men as well as Non-Commissioned Officers with the rank of Sergeant and Staff Sergeant shall serve under contract terms. The Contract shall be valid for seven (7) years renewable once and applicable to the category of servicemen aged between 18 and 40. Other servicemen shall serve on permanent terms.

rticle 18: Military Ranks.

Military ranks within the National Army shall fall under three categories and follow each other as indicated below:

CATEGORY 1: MEN:
- Private
- Private 1st Class
- Corporal.

CATEGORY 2: NON-COMMISSIONED OFFICERS.
- Sergeant
- Staff Sergeant
- Sergeant Major
- Warrant Officer Class II.
- Warrant Officer Class I.

/...

CATEGORY 3: OFFICERS.

1. Junior Officers:
   - Second Lieutenant
   - Lieutenant
   - Captain.

2. Senior Officers:
   - Major
   - Lieutenant-Colonel
   - Colonel

3. General Officers:
   - Brigadier
   - Major-General
   - Lieutenant General.

Ranks of Premier Sergent-Major, "Adjudant Principal" and "Commandant" are abolished. Servicemen currently holding these ranks shall maintain them until they are promoted to higher ranks. They shall be the last ones to hold those ranks New Ranks of Private 1st Class and Brigadier are hereby established.

rticle 19: Correspondence between Military Functions and Ranks.

The correspondence between military functions and ranks shall be as follows:

A. The National Army Headquarters

unctions:	Ranks:
Chief of Staff:	Major-General, Brigadier, Colonel.

/...

Deputy Chief of Staff:	Major-General, Brigadier, Colonel.
Head of Department in the National Army Headquarters:	Colonel, Lieutenant-Colonel, Major.
Assistant Head of Department in the National Army Headquarters:	Colonel, Lieutenant-Colonel, Major.
Head of a Department Section in the National Army Headquarters:	Lieutenant-Colonel, Major, Commandant Captain.
Deputy Head of a Department Section in the National Army Headquarters:	Lieutenant-Colonel, Major, Commandant, Captain.
Head of Sub-Section of a Department Section in the National Army Headquarters or Staff Officer in the National Army:	Captain, Lieutenant, 2nd Lieutenant.

<u>Units in the National Army.</u>

Brigade Commander:	Brigadier, Colonel, Lieutenant-Colonel.
Second in Command of a Brigade:	Brigadier, Colonel, Lieutenant-Colonel, Ma
Battalion Commander:	Lieutenant-Colonel, Major, Commandant, Captain.
Second in Command of a Battalion:	Lieutenant-Colonel, Major, Commandant, Captain.

.	Section Commander in a Brigade Headquarters:	Lieutenant-Colonel, Major,Commandant Captain.
.	Company Commander:	Commandant, Captain, Lieutenant.
.	Second in Command of a Company:	Commandant, Captain, Lieutenant.
.	Section Commander in a Battalion Headquarters:	Commandant, Captain, Lieutenant.
.	Platoon Commander:	Lieutenant, 2nd Lieutenant.
0.	Deputy Platoon Commander:	Warrant Officer Class II, Premier Sergent-Major, Sergeant Major, Staff Sergeant.
1.	Non-Commissioned Officer of a Brigade:	Warrant Officer Class I, Adjudant Principal Warrant Officer Class II,
2.	Non-Commissioned Officer of a Battalion:	Adjudant Principal Warrant Officer Class II,
3.	Non-Commissioned Officer of a Company:	Premier Sergent-Major Sergeant-Major, Staff Sergeant
4.	Section Commander:	Staff Sergeant, Sergeant
5.	Deputy Commander of Section:	Corporal
6.	Team Leader:	Corporal or Private 1st Class
7.	Gunman for special weapon or support arm:	Private 1st Class

/...

8. Rifleman: Private

. Military SchoolsCommand.

"Ecole Superieure Militaire" (ESM)
- (Staff College)
- Commander of ESM: Brigadier, Colonel, Lieutenant-Colonel.
- Second in Command of ESM: Colonel, Lieutenant-Colonel.

"Ecole des Sous-Officiers" (ESO):
- (Military Academy):
- Commander of ESO.: Colonel, Lieutenant-Colonel.
- Second in Command of ESO.: Colonel, Lieutenant-Colonel, Major.

Other Functions.
In addition to the functions mentioned above, there are other functions within the administrative, logistic and technical Army services, which may be exercised by servicemen holding various ranks provided for in the Army.

rticle 20: Appointment of Members of the Army Command High Council.

Members of the Army Command High Council shall be appointed by the Cabinet and Orders of their appointment shall be signed by the President of the Republic, in accordance with the provisions of Article 9 of the Protocol of Agreement signed on 30th October, 1992.

/...

rticle 21: **Appointment of General Officers and Senior Officers and their Promotion in Ranks and Functions.**

General Officers and Senior Officers shall be appointed and promoted in ranks functions by the Cabinet, upon recommendation of the Army Command High Council. Orders of their appointment shall be signed by the President of the Republic, in accordance with the provisions of Article 9 of the Protocol of Agreement, signed on 30th October, 1992.

rticle 22: **Appointment of Junior Officers and their Promotion in Ranks and Functions.**

Junior Officers shall be appointed and promoted in ranks and functions by the Cabinet, upon recommendation of the Army Command High Council. Orders of their appointment shall be signed by the Prime Minister.

rticle 23: **Appointment of Non-Commissioned Officers employed under Permanent Terms and their Promotion in Ranks and Functions.**

Non-Commissioned Officers employed under permanent terms shall be appointed and promoted in ranks and functions by the Army Command High Council, convened under the chairmanship of the Minister of Defence, who shall be the one to sign Orders of their appointment.

rticle 24: **Employment, Posting and Promotion of Servicemen under Contract Terms.**

All contracts for servicemen employed under contract terms shall be signed by the Minister of Defence. To be recruited, servicemen must pass a national competitive examination supervised by the Army Command High Council. Upon successful completion of the training programme, they shall be posted in Units by the Army Command High Council at the proposal of

/...

the Army Headquarters. Thereafter, promotions shall be made by the Army Headquarters at the proposal of the Brigade or Autonomous Unit Commanders under the Army Headquarters.

rticle 25: Modalities of Promotion.

Modalities of promotion in ranks shall be decided upon by the Government. Servicemen may move from a lower category to an upper category, especially after passing a test organized for that purpose.

rticle 26: Commissioning

Conditions and modalities of commissioning to senior ranks and functions shall be specified by the Government.

rticle 27: Transfers.

Transfers from a Unit or Service to another Unit or Service and which do not affect the power of appointment entrusted to other authorities shall be made by the Chief of Staff, upon delegation of powers by the Army Command High Council, and in consultation with the Unit Commanders or those in charge of Services.

Transfers within Units which do not affect the power of appointment entrusted to other authorities shall be made by Commanders of those Units and the Chief of Staff shall be informed.

rticle 28: Secondment, Detachment and Transfer.

Members of the National Army may be seconded, detached or transfered to another Service. The authority vested with the power of nomination to military ranks and functions shall take adequate measures to make available the servicemen concerned by secondment, detachment or transfer.

/...

rticle 29: Termination of Service.

Resignation, leave without pay, dismissal as well as pensioning off shall be decided upon by the authority vested with the power of appointment or promotion.

rticle 30: Age of Retirement.

The age of retirement shall be:

- 45 years for Non-Commissioned Officers employed under contract terms and for Junior Officers;
- 50 years for Senior Officers;
- 55 years for General Officers.

Upon reaching the retirement age, servicemen employed under permanent terms, and exercising specialized functions may, however, benefit from a service extension and be employed under contract terms. In this case, they cannot expect to be promoted.

ub-Section 2: Disciplinary Regime, Military Courts and the Criminal Investigation and Prosecution Department (Auditorat)

aragraph 1: Principles.

rticle 31: Breaches of discipline by servicemen shall be liable to punishment by disciplinary committees and various echelons of the military hierarchy empowered to inflict disciplinary punishments provided for.

Infringements of penal laws by servicemen shall be punished by the competent Military Courts which shall hand down the corresponding sentences provided in the said laws.

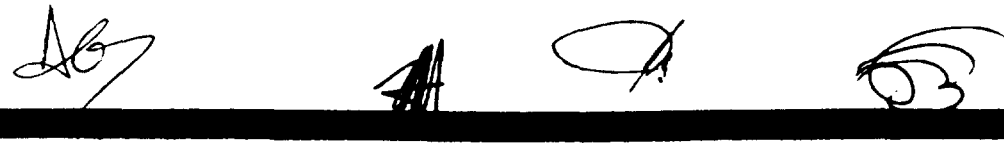

/...

Disciplinary punishments and the final criminal sentences shall entail disciplinary measures affecting the career of servicemen concerned.

Paragaph 2: **Disciplinary Punishments.**

Article 32:

Breaches of discipline which, according to the penal laws, fall short of offences, shall entail disciplinary punishments. The military disciplinary regulations shall specify the conduct of servicemen.

Disciplinary punishments shall be aimed at redressing the behaviour of individual servicemen with a view to maintaining harmony and discipline within the Units and Services. It shall therefore be forbidden to transform disciplinary punishments into a means of harassement.

Article 33: **Disciplinary Committees.**

Disciplinary Committees are hereby be set up within each Unit to rule on breaches of discipline.

Within the Battalion, which constitutes a part of a Brigade, a Disciplinary Committee shall be set up to give ruling on cases involving Non-Commissioned Officers, Corporals, Privates First Class and Privates deployed within the Battalion.

A Disciplinary Committee within the Brigade shall rule on cases involving Officers of the said Brigade, except those involving Battalion Commanders and their Second in Command. The Disciplinary Committee of the Brigade shall also give its ruling on appeals against decisions by disciplinary Committees of Battalions under its jurisdiction.

/...

Disciplinary Committees within Autonomous Battalions and Companies shall be set up at two levels:

- A Disciplinary Committee made up of Officers to rule on cases involving Officers of the said Battalion or Company, except those involving the Battalion Commander and his Second in Command, and the Company Commander and his Second in Command.
- A Disciplinary Committee made of Officers, Non Commissioned Officers and Rank and File to rule on cases involving Non-Commissioned Officers, Corporal, Privates First Class and Privates deployed within the said Battalion or Company.

Rulings given by that Disciplinary Committee shall not be subject to an appeal before the Disciplianry Committee giving rulings on cases involving Officers.

Article 34: Competence of the Army Command High Council with regard to Discipline.

The Army Command High Council shall give its ruling on cases involving Brigade Commanders and their Second in Command, Officered and Autonomous Batallion Commanders and their Second in Command, and Autonous Company Commanders and their Second in Command.

The Army Command High Council shall also rule on cases of appeals against disciplinary punishments handed down to Officers by disciplinary Committees of Brigades, autonomous Battalions and Companies.

Article 35: Appointment of Disciplinary Committee Members.

Members of the Disciplinary Committees shall be appointed by the Army Command High Council for an indefinite period. The Army Command High Council may replace them whenever it deems it necessary.

Members of the Disciplinary Committees shall be fully independent in the execution of their duties. They shall independently assess cases referred to them and take decisions on case warrants without being subjected to any external pressure. They cannot be given any order or injunction, especially from their immediate superiors.

Article 36: The Competence of the Military Hierarchy with regard to Discipline.

Officers responsible for order and discipline within their Units shall be empowered to inflict punishment to defaulting Non-Commissioned Officers and Men, such as cleaning fatigues (cleaning of sanitary facilities, etc.) and non exhausting physical exercises (push-ups, hopping, long-distance running, etc.).

Punishments inflicted by the military hierarchy shall not be put on record in the personal file of the punished serviceman and, therefore, shall not entail disciplinary measures.

Furthermore, Unit Commanders shall have the power of provisional arrest, not exceeding 48 hours, over any defaulting serviceman under their authority. The competent Disciplinary Committee shall also be a forum to give ruling on appeals lodged against punishments inflicted by the hierachy

Article 37: Disciplinary Punishments Applicable to Officers.

1. The Admonition: Written warning reprimanding the addressee

/...

2. Arrests with Access: maximum 21 days. Under such arrests, the party concerned shall be under obligation to stay confined within his residence, without possibility of leaving, except for performing his duties, taking his meals and carrying out duties approved by the Command. The punishment decision shall specify whether visitors are allowed or not.

3. Arrests without Access: maximum 15 days. Under such arrests, the party concerned shall be dispensed from any services. He shall be suspended from all military duties and forbidden to leave his residence, except for taking his meals, or performing duties approved by the Command. He shall be formally barred from receiving visitors, except as the service may require. This suspension shall not be taken into account when pension is calculated.

rticle 38: Disciplinary Punishments applicable to Non-Commissioned Officers.

1. Open Arrests: maximum of 21 days.

This punishment does not exempt the party concerned from performing his military duties. It shall consist in barring the party concerned from leaving the quarters, except for attending to his duties and performing tasks approved by the Command, participating in any collective recreation or attending any entertainment which may be organized within his quarters, or using the mess and the Canteen.

2. Close Arrest: maximum of 21 days.

This punishment does not exempt the party concerned from performing his duties. The party shall be under obligation to stay indoors without the possibility of leaving, except to attend to his duties and other tasks approved by the Command. No visitors shall be allowed. In the case of

/...

single Non-Commissioned Officers, meals shall be taken to them by those who are on week duty in the camp.

3. Military Confinement: maximum of 15 days.

Under such arrests, the party concerned shall be exempted from any services. The punishment shall consist of continued detention in the cell for the whole duration of the punishment. The serviceman serving out such a punishment may, however, be compelled to carry out exercises and work within the quarters; may use whatever time is strictly necessary for carrying out duties approved by the Command and must be subjected to a daily compulsory constitutional walk of 30 minutes.

Article 39: Disciplinary Punishments Applicable to Men.

1. Open Arrests: maximum of 21 days.

This punishment does not exempt the party concerned from performing his military duties. It shall consist in barring the party concerned from leaving the quarters, except for attending to his duties and performing tasks approved by the Command, participating in any collective recreation or attending any entertainment which may be organized within his quarters, or using the Canteen.

2. Arrests in the Guardhouse: maximum of 21 days.

Under such arrests, the party concerned shall not be exempted from performing his duties;

He shall be forbidden to leave the quarters, except for attending to his duties and performing tasks approved by the Command;

/...

He shall be forbidden to participate in any collective recreation or attend any entertainment organized in the quarters;

He shall be forbidden to go to the Canteen and compelled to stay within the guardhouse from evening till the reveille on week days, and the whole day on Sundays and public holidays, except when performing certain duties approved by the Command;

The party concerned shall be compelled to take a daily constitutional walk of 30 minutes during the period of seclusion.

3. Military Confinement: maximum of 15 days.

To be sentenced to military confinement shall exempt the party concerned from all duties. The punishment shall consist of continued detention in the cell for the whole duration of the sentence. However, the serviceman serving out one of these punishments may be compelled to carry out exercises and work within the quarters; may use whatever time is strictly necessary for carrying out duties approved by the Command, and must be subjected to a daily compulsory constitutional walk of 30 minutes.

Article 40:. Deduction of a 1/4 of the Salary.

Concurrently with a disciplinary punishment, servicemen guilty of failing to maintain, causing the deterioration, loss, theft or total or partial destruction of items or other material belonging to the State may have a quarter of their salaries deducted until the costs of the damage are recovered in full.

/...

Paragraph 3. Disciplinary Measures.

Article 41: Principles.

Any serviceman having been liable to a disciplinary punishment or penalty meted out by a competent Court may be subject to a disciplinary measure to be specified by relevant organs.

No disciplinary measure can be inflicted as long as the facts of the case have not been ascertained, either by the disciplinary committees or the military Courts, as the case may be.

Disciplinary measures serve as a warning and may entail delay in promotion, removal from function or office, on a temporary or permanent basis.

Disciplinary measures shall be inflicted by the authority vested with the powers of appointment and promotion.

Article 42: Disciplinary Measures falling under the Government's Competence.

Disciplinary measures applicable to Officers shall be decided upon by the Cabinet at the proposal the Army Command High Council. Relevant Orders shall be signed, as the case may be, either by the President of the Republic or by the Prime Minister.

Article 43: Disciplinary Measures falling under the Competence of the Minister of Defence and the Army Command High Council.

The Army Command High Council, convening under the chairmanship of the Minister of Defence, shall give its ruling on cases involving Non-Commissioned Officers and decide on disciplinary action to be taken against them.

/...

The Minister of Defence shall sign the Order relating to the agreed disciplinary measures.

Article 44: Disciplinary Measures falling under the Competence of the Army Headquarters.

The Army Headquarters shall rule on cases involving Corporals, Privates first class and privates, and shall adopt the required disciplinary measures.

The Chief of Staff shall sign Acts containing the disciplinary measures adopted by the Army Headquarters. The Act containing the disciplinary measure terminating the contract shall, however, be signed by the Minister of Defence.

Article 45: Disciplinary Measures applicable to Officers.

1. Delay in Promotion.

Disciplinary punishments applicable to Officers of all ranks shall entailthe following delays in promotion:

- Three (3) months for one (1) admonition;
- Six (6) months for one (1) punishment consisting of an arrest with access;
- Nine (9) months for one (1) punishment consisting of an arrest without access.

Any Officer sentenced to a term of imprisonment not exceeding six (6) months, shall have his promotion held up for a period between six (6) and twelve (12) months.

/...

2. Suspension of Military Duties.

Any Officer sentenced to a term of imprisonment not exceeding six (6) months shall be suspended from all military duties for a period corresponding to the duration of the sentence.

3. Automatic Dismissal and Removal from Office.

Any Officer sentenced to a term of imprisonment exceeding six (6) months shall automatically be dismissed or removed from office. In any case, he shall be removed from Office if he was sentenced by a Criminal Court.

Article 46: Disciplinary Measures applicable to Non-Commissioned Officers.

1. Delay in promotion.

Disciplinary punishments applicable to Non-Commissioned Officers of all ranks shall entail the following delays in promotion:

- Three (3)months for one (1) punishment consisting in a close arrest or two (2) punishments consisting in open arrests;
- Six (6) months one for (1) punishment consisting in military confinement;
- Nine (9) months for two (2) punishments consisting in military confinement;
- Twelve (12) months for three (3) punishments consisting in military confinement.

Any Non-Commissioned Officer sentenced to a term of imprisonment not exceeding six (6) months, shall have his promotion held up for a period between six (6) and twelve (12) months.

2. Suspension of all Military Duties.

Any Non-Commissioned Officer sentenced to a term of imprisonment not exceeding six (6) months shall be supended from all military duties for a period corresponding to the duration of the sentence.

3. Automatic Dismissal and Removal from Office.

Any Non-Commissioned Officer sentenced to a term of imprisonment exceeding six (6) months shall automatically be either dismissed or removed from Office. In any case, he shall be removed from Office if he was sentenced for a criminal offence.

4. Termination of Contract.

The contract shall be terminated for any Non-Commissioned Officer employed under Contract terms, sentenced to a term of imprisonment exceeding six (6) months.

Article 47: Disciplinary Measures applicable to Men.

1 Delay in Promotion.

Disciplinary punishments applicable to Rank and File shall entail the following delays in promotion:

- Three (3) months for one (1) punishment consisting in an arrest in the guardhouse or two (2) open arrests;
- Six (6) months for one (1) punishment consisting in military confinement;
- Nine (9) months for two (2) punishments consisting in military confinement;

/...

- Twelve (12) months for three (3) punishments consisting in military confinement.
  Any Man sentenced to a term of imprisonment not exceeding six (6) months, shall have his promotion held up for a period between six (6) and twelve (12) months.
  These delays in promotion shall be effective after the concerned party has passed a promotion test.

2. Suspension of all Military Duties.

Any Rank and File sentenced to a term of imprisonment not exceeding six (6) months shall be supended from all military duties for a period corresponding to the duration of the sentence.

3. Termination of Contract

The contract shall be terminated for any Private, Private and 1st Class or any "Corporal" sentenced to a term of imprisonment exceeding six(6) months.

Paragraph 4: The Commission Responsible for the Drafting of Disciplinary Regulations.

Article 48: An Ad Hoc Joint Drafting Committee is hereby set up to prepare the integral text of the disciplinary regulations for the National Army.

The Committee shall be expected to start its work before 15th August, 1993 and complete it by 31st August, 1993. The Commission shall base its work on draft texts of disciplinary regulations worked out by each party.

The Joint Committee shall work under the chairmanship of the Commander of the Neutral Military Observer Group or a person appointed by him; the

/...

latter shall be in touch with the two parties so as to set up a working timetable.

Regulations drafted by the Joint Committee shall constitute the temporary disciplinary regulations for the National Army, pending their adoption by the Broad-Based Transitional Government, through a Presidential Decree.

Paragraph 5. Military Courts and Criminal Investigation and Prosecution Department [Auditorat].

Article 49: Military Courts shall be empowered to pass judgement on offences committed by servicemen and provided for by penal laws.

In accordance with Article 26 of the Protocol of October 30, 1992, the recognised Military Courts shall be: the War Councils and the Military Court. The Court of Cassation shall take cognizance of appeals against decisions by the Military Court.

The Court of Cassation shall be empowered to pass penal and first degree judgement on the Chairman and Deputy Chairman of the Army Command High Council and General Officers. On appeal, their cases shall be heard in the forms specified in Article 27 of the Protocol of 30th October, 1992.

The Magistrates of Military Courts shall be fully independent in the exercise of their judicial functions. They shall independently assess cases referred to them and take decisions without being subjected to external pressure. They cannot be given any order or injunction, especially from their immediate superiors.

The Magistrates of Military Courts shall be appointed, for a renewable period of twelve months, by the Cabinet at the proposal of the Army Command High Council and the Command Council of the Gendarmerie, referred to in Article 87 of the present Protocol, meeting in a joint session

/...

convened and chaired by the Minister of Defence. The Act of appointment shall be signed by the Prime Minister. The authority vested with the power of appointment may, at any moment, terminate the judicial functions of Magistrates of Military Courts deemed incompetent or unworthy of their posts.

The procedure followed for appointments shall be abided by in the termination of judicial functions of Magistrates of the Military Courts.

Article 50: A Military Criminal Investigation and Prosecution Department is hereby established and shall play the role of the Public Prosecution Department in Military Courts.

Section 4: Formation of the National Army.

Sub-Section 1: Process of the Formation of the National Army.

Article 51: The process of formation of the National Army shall be conducted in the following stages:

- Establishment of the Army Command High Council;
- Establishment of the Neutral International Force;
- Disengagement of forces;
- Integration operations;
- Training of servicemen;
- Deployment of troops in the Units.

Paragraph 1: Establishment of the Army Command High Council.

Article 52:

The Army Command High Council shall be established concomittantly with the Transitional Institutions.

aragraph 2: The Neutral International Force.

rticle 53: Composition.

The Neutral International Force shall be under the responsibility and command of the United Nations and shall be composed of contingents provided by countries selected by the Secretary General of the United Nations. Before deciding on a definite list of those countries, he shall require the approval of the two parties.

The Neutral Military Observer Group (NMOG) may, with certain arrangements between all the parties concerned, be partly or entirely integrated into the Neutral International Force, or perform certain duties specifically entrusted to the Neutral International Force.

rticle 54: Missions.

The Neutral International Force shall have the following missions:

A. Overall Mission.

The Neutral International Neutral Force shall assist in the implementation of the Peace Agreement, more especially through the supervision of the implementation of the Protocol of Agreement on the Integration of Armed Forces of the two parties as well as the provision of all kinds of assistance to the competent authorities and organs.

B. Security Missions

1. Guarantee the overall security of the country and especially verify the maintenance of law and order by the competent authorities and organs.

/...

2. Ensure the security of the distribution of humanitarian aids.

3. Assist in catering for the security of civilians.

4. Assist in the tracking of arms caches and neutralization of armed gangs throughout the country.

5. Undertake mine clearance operations

6. Assist in the recovery of all weapons distributed to, or illegally acquired by the civilians.

7. Monitor the observance by the two parties of modalities for the definite cessation of hostilities, provided for in the Peace Agreement.

C. Missions of Supervising the Process of Formation of the National Army.

1. Undertake the demarcation of Assembly Zones and identify places for the establishment of Assembly and Cantonment points.

2. The Neutral International Force shall be responsible for the preparation of Assembly and Cantonment points. It shall take in and manage all the equipment and financial resources required for the performance of that duty.

   The Military barracks may serve as Assembly or Cantonment points, on condition that the two parties be informed. These camps shall be subjected to the monitoring of the Neutral International Force and to requirements of other Assembly or Cantonment points.

3. Determine security parameters for the City of Kigali, in line with the objective of making it a neutral zone.

4. Supervise:

   - operations for the disengagement of forces, especially the movement of troops towards Assembly points, and servicemen moving to the Cantonment points for purposes of depositing heavy weapons;

   - the transformation of military barracks into Assembly or Cantonment points;

   - verifications following these operations.

5. Ensure that rules of discipline by servicemen inside and outside assembly points are observed.

6. Cross-check inventories of armaments and ammunitions of the two parties and monitor operations for the separation of heavy from light weapons.

7. Keep watch on cantonment points and participate in the guard of light weapons and ammunition magazines located in Assembly points.

8. Supervise operations for the identification of the military personnel to be carried out in the various Assembly points.

9. Supervise operations for the supplies to the troops in the Assembly points, it being understood that the supplies shall be confined to non lethal items.

10. Participate in the programme designed for the training of members of the new Armed Forces and cater for the security of Training Centres.

11. Supervise the operations for the demobilization of servicemen and gendarmes not eligible to constitute the new Armed Forces.

/...

12. Assess the status of implementation of the formation process and make recommendations to the Broad-Based Transitional Government, the Army Command High Council and the Command Council of the National Gendarmerie.

aragraph 3: Disengagement of Forces.

rticle 55: Definitions.

An Assembly zone is a portion of the national territory within which the Assembly and Cantonment points of each of the two parties shall be located.

Assembly points are centres where specific groups of servicemen of the two Forces shall be confined and their identification conducted. Those centres shall be the starting point of the formation, integration and demobilization process that shall be conducted under the supervision of the Neutral International Force.

Cantonment points are places identified for the storage of heavy weapons outside the Assembly points.

rticle 56: Demarcation of Assembly Zones.

The demarcation of Assembly zones shall be undertaken by the United Nations Reconnaisance Mission in collaboration with the NMOG, on the basis of the current positions of the two Forces. During this demarcation exercise, care will be taken to ensure that the following conditions are fulfilled:

1. The two assembly zones be separated by a demilitarized zone whose width shall be superior to the range of heavy artillery used in the conflict;

/...

2. Each Assembly zone shall contain all the Assembly and Cantonment points of the party concerned;

3. Within the Assembly zones, the Assembly points shall be located in such a way as to avoid clustering;

4. The Assembly and Cantonment points shall be located in such a way to allow the population to use its habitual property and facilities;

5. The Assembly zones shall be demarcated so as to avoid encirclement of one force by another.

rticle 57: Identification of Assembly Points.

Assembly points shall be identified by the International Neutral Force, in collaboration with each party within its Assembly zone. These points shall, as much as possible, be located on Government's Estates or Estates belonging to collectivities, and shall be located far from built-up areas.

In identifying an Assembly point, account shall be taken of viability requirements (availability of water, hospitable climate, etc.) and facilities for an easy organization of supplies, it being clearly understood that supplies refer to non lethal items.

rticle 58: Movement of Troops towards Assembly Points.

The Neutral International Force, in collaboration with the Army Command High Council, shall specify the date whereby elements of the two sides shall move towards the Assembly points after having deposited heavy weapons in the Cantonment points.

All the elements of the two Forces should join the Assembly points, except the administrative and support staff, whose composition and size shall be

/...

determined by the Neutral International Force, in collaboration with the Army Command High Council.

rticle 59: **Command of the Assembly Point.**

Each assembly point shall be under a Military Commander appointed by the party concerned.

The Military Commander shall be answerable to the Command to which he is accountable and to the Army Command High Council, with regard to the following:

- Staff discipline;
- Observance of the Peace Agreement by the troops, especially provisions relating to the definitive cessation of hostilities;
- Observance of directives and orders emanating from the Army Headquarters;
- Control of armaments, ammunition and other equipment belonging to Units within the Assembly point.

The Military Commander shall forward to the Army Headquarters a daily situation report specifying the personnel, equipment and ammunition in the Assembly point and relevant activities carried out in conformity with directives issued by the National Army Headquarters.

The Military Commander shall liaise the Command to which he is accountable and the Neutral International Force. The latter may, however, appoint its own liaison Officer.

/...

rticle 60: **Security of Assembly Points.**

The security of Assembly points shall be jointly ensured by contingents amounting to 10% of the total strength of those points and whose minimal size should be one hundred and twenty (120) men, and by members of the Neutral International Force.
The personnel of those contingents shall carry individual weapons only, and shall strictly be deployed within the Assembly points.

Additional security measures to be taken in each Assembly point shall be decided upon by mutual agreement between the Commander of the Assembly point and the Neutral International Force, taking into account the specificities of each Assembly point.

rticle 61: **Guard of Arms, Ammunition and Military Equipment in the Assembly Points.**

Once the troops arrive in the Assembly points, each party shall undertake identification of its troops and make an inventory of armaments and ammunitions.

The Army Command High Council and the Neutral International Force shall cross-check the inventory of arms and ammunition as well as the identification of servicemen.

All the troops confined in these points shall be deprived of their light or personal arms to be kept in magazines located in the same Assembly points under the joint guard of the Neutral International Force and the Force concerned. Light weapons required for training exercises in the Assembly point may, however, be put at the disposal of the Commander of the Assembly point, by the Neutral International Force when and as necessary These exercises shall be carried out in accordance with a programme known

/...

to the Army Command High Council and the International Neutral Force. The weapons utilized shall be returned to the depot upon completion of each round of exercise.

The Army Command High Council and the Neutral International Force shall specify the date for the storage of arms and ammunition. The same date shall apply for the storage of arms and ammunition in all Assembly points.

Article 62: The Personal Identification File.

A personal identification file shall be opened for each serviceman as soon as they report to the Assembly point. The file shall include the following particulars:

> Family name and First name; Rank; Years of Service within the Rank; Regimental Number; Sex; Date of Birth; Marital Status; Being a Rwandese national; Type and Serial Number of Weapon; Specialization; Military or Civilian Diploma, Certificate or Brevet, Blood Group.

Shall be regarded as a Rwandese citizen any individual who considers himself to be Rwandese and whose parents or ancestors, or one of them, may be localized as a member of the national community dwelling in the territory recognized today as Rwanda.

The Army Command High Council may decide to include additional elements of identification such as a passport size photograph.

Article 63: Troops' Activities in Assembly Points.

Troops may notably undertake the following activities in Assembly Points

/...

- Physical exercises and cultural and leisure-time activities;
- Activities planned within the framework of the first phase of the military training programme;
- replenishment of food, fuels, lubricants and medical supplies;
- maintenance and repair of equipment;
- infrastructure improvement and clearance of mines in their assembly point.

The Neutral International Force shall monitor the observance of this provision by each party.

rticle 64: Incidents or Ceasefire Violations.

In the event of incident or Ceasefire violation, Commanders of each echelon shall take immediate and appropriate action with regard to their troops, so as to put an end to that incident or violation.

Any Commander informed of an incident or violation shall immediately issue a warning to the perpetrators and, if they belong to his Unit, take adequate disciplinary action.

Without prejudice to any disciplinary action to be taken by the Unit Commander, the authors or those responsible for the incident or violation shall be liable to punishments specified by the Army Headquarters.

The Military Commander shall also be duty bound to report any incident or violation to his immediate superior, the Neutral International Force and the Army Headquarters.

/...

In the event of incident or violation, Units shall refrain from taking any retaliatory action and shall strive to avoid any action that may trigger escalation.

The Neutral International Force shall be informed of any incident or violation and shall track down the perpetrators.

rticle 65: Movement Outside the Assembly Point.

Servicemen in an Assembly point shall be forbidden to move outside that Assembly point without the permission of the Commander of the Assembly point. In any case, they shall be strictly forbidden to move about armed.

The Neutral International Force shall monitor the observance of this provision by each party.

rticle 66: Identification of Cantonment Points.

There shall be several Cantonment points located in the respective Assembly zones. Their ultimate number and their location shall be decided upon by the Commander of the Neutral International Force, after seeking the approval of the party concerned. Cantonment points shall be distant enough from Assembly points.

rticle 67: Definition of Heavy Weapons.

All weapons shall be considered as heavy weapons except pistols, UZZI sub-machine guns, sub-machine guns, rifles, light machine-guns (6.25 mm), medium machine guns (7.62 mm) and general-purpose machine guns (7 62 mm).

Armoured vehicles such as personnel carriers, tanks etc. helicopters and other military aircrafts belong to the category of heavy weapons.

/...

Upon the request of the Army Command High Council and the Command Council of the National Gendarmerie, the Neutral International Force or the expanded NMOG may authorize the use of those vehicles and aircrafts for specified missions.

rticle 68: Guard and Maintenance of Arms within the Cantonment Points.

The Cantonment points shall be under the only control of the Neutral Internal Force. Some members of the respective parties shall, however, be authorized by the Neutral International Force to visit the Cantonment points for purposes of servicing heavy weapons.

rticle 69: Ownership of Arms and Military Equipment in the Assembly and Cantonment Points.

The Military equipment based in Assembly or Cantonment points and stored in magazines located in the Assembly points shall be verified and an inventory and record kept. This equipment shall remain the property of either party until the completion of the integration of the two forces.

Thereafter, the Broad-Based Transitional Government shall, at the proposal of the Army Command High Council, decide on the fate of those arms, ammunition and military equipment.

rticle 70: Determining the Types of Light weapons for the National Army and the National Gendarmerie.

The Army Command High Council and the Command Council of the National Gendarmerie shall determine the type of light weapons for the National Army and the National Gendarmerie. Those weapons should be available at the training sites at the start of the integration process of the forces.

/...

Those weapons shall be made available by the ACHC and the CCNG and shall belong to the National Army and the National Gendarmerie respectively.

rticle 71: Uniforms and Insignia.

The uniforms and insignia of the National Army and the National Gendarmerie shall be determined by the Army Command High Council and the Command Council of the National Gendarmerie respectively.

rticle 72: Security Arrangements for the Establishment of Transitional Institutions in Kigali.

In general, security shall be catered for by the Neutral International Force and, in case of delay in its deployment, by the expanded NMOG of which the United Nations assumes responsibility in accordance with Article 53 of this Protocol.

The establishment of transitional institutions shall take place after the deployment of the Neutral International Force or the expanded NMOG and after the withdrawal of foreign troops. The withdrawal of foreign troops shall be imnplemented in accordance with modalities defined in the March 7, 1993 Dar es Salaam Communique.

In consultation with the Neutral International Force or the Expanded NMOG and the Rwandese Patriotic Front (RPF), the Coalition Government shall make available accomodations for RPF personalities who will be members of the transitional institutions.

In consultation with the Neutral International Force or the expanded NMOG, the Broad-Based Transitional Government shall provide accomodation and offices affording suitable security conditions to the members of the Army Command High Council and the Command Council

/...

of the National Gendarmerie. The members of these organs shall also be consulted.

In order to participate in catering for the security of its personalities, the RPF shall bring to Kigali a security unit whose size is equivalent to one (1) Infantry Battalion of six hundred (600) troops.

aragraph 4: **Integration Operations**

rticle 73: **Criteria for the Selection of Servicemen in the National Army.**

The selection of servicemen to constitute the National Army by each party and those to be demobilized shall be carried out in the Assembly points. Servicemen to constitute the National Army should meet the following criteria:

1. Officers:

They should:

- be volunteers;
- be serving as Officers;
- be Rwandese Nationals.
- be physically fit, i.e. they should obtain a certificate of physical fitness from a registered physician.
- The war-wounded and handicapped shall, however, remain eligible for Army service, according to their specializations, unlike the disabled servicemen who shall be demobilized but assisted. This shall apply to all categories of servicemen.
- be at least 21 years of age.

/...

2. Non-Commissioned Officers:

They should:

- be volunteers;
- be serving as Non-Commissioned Officers;
- be Rwandese Nationals;
- be physically fit;
- be at least 18 years old.

3. Troops:

They should:

- be volunteers;
- be serving in the Army;
- be Rwandese Nationals
- be physically fit;
- be at least 18 years old.

For all 3 categories of servicemen, a cross-check shall be made out in case of any doubt concerning personal particulars, as per criteria spelled out above

Each party shall determine independently the rank and seniority of each member of its force.

Article 74: Proportions and Distribution of Command Posts.

During the establishment of the National Army, the proportions and distribution of Command posts between the two parties shall abide by the following principles:

1. The Government forces shall contribute 60% of the forces and the RPF 40% of the forces for all levels apart from the posts ofCommand described below.

2. In the chain of Command, from the Army Headquarters to the Battalion, each party shall have a 50% representation for the following posts:

   Chief of Staff, Deputy Chief of Staff, Heads of Departments at the Army General Headquarters (G1, G2, G3, G4), Brigade Commanders, Seconds in Command of Brigades, Heads of Sections at Brigade Headquarters (S1, S2, S3, S4), Battalion Commanders and Seconds in Command of Battalions, Commanders and Seconds in Command of Specialized Units, namely: Paracommando, Reconnaissance, Military Police Battalions, and of Support Units, Engineering, Field Artillery, Anti-aircraft Artillery Battalions and the Logistics Center; Commanders and Seconds in Command of the Schools -ESM and ESO -and Commanders and Seconds in Command of the Training Centres in BIGOGWE and BUGESERA.

3. All top posts described above shall be distributed among the Officers of the Rwandese Government and those of the RPF in accordance with the principle of alternation.

   Thus, the Rwandese Government forces and the RPF forces shall supply an equal number of Brigade and Battalion Commanders, of Seconds in Command of Brigade and Battalion, of Heads of Department at the Army Headquarters, of Heads of Section at Brigade Headquareters; of Commanders and Seconds in Command of Specialized and Support Units, of Schools and Training Centers described above. However, neither force can hold at the same time

/...

the posts of Commander and Second in Command within the same Unit.

4. Without prejudice to Article 73, the proportions of the two forces in all the structures of the National Army shall be affected by no prerequisite condition in terms of accessibility. Thus, adequate training shall be given to the servicemen retained without fulfilling all the necessary requirements in accordance with the modalities determined by the Army Command High Council.

5. The post of Chief of Staff of the National Army shall be heldto the Government party and the one of Deputy Chief of Staff to the Rwandese Patriotic Front (RPF).

rticle 75: Specific Case of Officer Trainees in ESM and Non-Commissioned Officer Trainees in ESO.

The Trainees still following their studies in the Schools of the Armed Forces as well as servicemen undergoing short term training abroad shall be considered as active members of the Armed Forces.

The recruitment within the Armed Forces shall be frozen until the end of the Transition Period. The Broad-Based Transitional Government may, however, decide, after seeking advice from the Army Command High Council and the Command Council of the National Gendarmerie to resume admission to the School of Armed Forces before the end of the Transition Period.

/...

aragraph 5: Training of the National Army.

rticle 76:

Elements of each Force selected to constitute the National Army shall undergo training for purposes of harmonizing techniques and achieving harmonious integration of servicemen.

rticle 77: Training Phases.

The training shall be carried out in two phases:

Phase 1: The separate training of servicemen of the Rwandese Armed Forces and the Rwandese Patriotic Army shall be conducted in their respective zones. This phase shall be aimed at preparing servicemen of both parties to live together in their future Units so as to constitute a single Army and do away with the spirit of antagonism nurtured by the war. The duration of the separate training shall be one month.

Phase 2: The joint training of the Units to constitute the National Army shall be dispensed to servicemen from the two Forces, in the same training centres.

That training shall be dispensed to servicemen to constitute the National Army and selected by each party, in accordance with the criteria spelled out under Article 73 of the present Protocol.

It shall, as much as possible, begin after the designation of servicemen within their Units.

This phase shall be aimed at harmonizing techniques of the two armies, nurturing the team spirit, enhancing the patriotic spirit and that of reconciliation. Such training shall be organized in training

/...

centres in three (3) batches composed of more or less than four thousand and four hundred (4,400) men. Each batch shall undergo a two-months training in the centres.

The duration of the joint training shall be 7 months, i.e.two (2) months training for each batch, and 2 x 15 days of preparation between the batches. Servicemen who will not be selected for the first batch shall be waiting in the Assembly points for their turn.

The Army Command High Council shall decide on the overall training programme as well as on the sequence of rotations in training centres.

The programme and calendar of training are attached of the present Protocol as Annex II and are an integral part of this Protocol.

rticle 78: Instructors.

For all the training phases, recourse shall be made to Rwandese instructors provided by the two parties and foreign instructors. The latter shall be provided by countries to be agreed upon by the two parties as well as the Neutral International Force. The number of instructors shall amount to 10% of the number of servicemen to be trained in each batch.

The joint training of Rwandese instructors shall be undertaken, as much as possible, before the separate training of servicemen from both parties.

rticle 79: Joint Commission of Programmes

An Ad Hoc Joint Commission of Programmes is hereby set up and shall be responsible for the elaboration of syllabuses relating to all subjects to be taught during the separate and joint training periods. Those syllabuses

/...

should be made available before the disengagement of the forces of the two parties.

The said Commission shall start its work before 15th August, 1993 and shall be expected to be through by 31st August, 1993.

The draft syllabuses elaborated by each party shall constitute the basis for the work of the Commission.

The Commission shall work under the Chairmanship of the Neutral Military Observer Group Commander or a person appointed by him. The latter shall come into touch with the two parties so as to set up the calendar of work.

aragraph 6: **Deployment of Troops in the Units.**

rticle 80: The posting of Servicemen in the respective Units shall be carried out upon completion of the training of each batch.

After integration, the Army, composed of elements from the two parties, shall be called the 'NATIONAL ARMY'.

aragraph 7: **The Responsibility of the Broad-Based Transitional Government with regard to the Integration of Forces.**

rticle 81: The Broad-Based Transitional Government shall take all necessary measures to ensure the integration of the armed forces from the two parties.

Upon its establishment, the Broad-Based Transtitional Government shall assume its responsibility towards the forces of the two parties in terms of Command, logistics, supply and welfare. To this end, the two parties shall provide numbers and names of the members of their respective forces.

The Neutral International Force or the expanded NMOG shall, as soon as possible, verify those names and numbers.

/...

The two forces, for whom the Broad-Based Transitional Government assumes responsibility, shall fall under its authority. The RPF shall then be considered as a political party or its equivalent.

CHAPTER II: THE NATIONAL GENDARMERIE.

Section 1: Definition, Missions and Principles.

Article 82: Definitions.

The National Gendarmerie is an armed force established to ensure the implementation of laws with a view to maintaining public order and security.

Article 83: Missions.

The National Gendarmerie shall fulfil the following missions:

1. Maintain and restore public order;
2. Prevent offences;
3. Trace offences and their perpetrators;
4. Carry out arrests in conformity with the law;
5. Perform police duties within the administration;
6. Perform, within the limits established by the law, prosecution and criminal investigation duties;
7. Enforce laws and regulations for which it was directly mandated;
8. Perform police duties in Courts and Tribunals;
9. Ensure the protection of people and property;

/...

10. Rescue and provide assistance to people in danger or distress;

11. Intervene in the event of disaster or calamity;

12. Perform traffic police duties throughout the national territory;

13. Ensure the security of airports;

14. Collaborate, within the framework of bilateral cooperation, with INTERPOL and counterpart Institutions of foreign countries;

15. Participate, within the framework established by the law, in the defence of the national territory.

Article 84: Principles.

1. The National Gendarmerie, as an Institution, shall be governed by laws and regulations of the country. In its functioning and the performance of its duties, it shall observe the spirit and letter of International Conventions to which the Republic of Rwanda is a party.

2. The National Gendarmerie shall be at the disposal of the Government and shall be subordinated to its authority, the two institutions abiding by the Fundamental Law, the laws, Democratic principles and the Rule of Law

3. The National Gendarmerie shall, in line with its mission to ensure public order and internal security within the limits of the principles enunciated above, act spontaneously and independently organize its activities, so as to fulfil that mission. It shall, therefore, be answerable to the Government with regard to internal security of the country.

4. The National Gendarmerie shall submit reports to the administrative authority of the Area where it operates and shall regularly inform the latter about its activities.

5. The National Gendarmerie shall be a non partisan force. To this end, it shall always be guided, in the performance of its duties, by the supreme interest of the State and the public good, and shall perform its duties in an unbiased manner.

6. Members of the National Gendarmerie shall solely be recruited among Rwandese volunteer citizens, on the basis of their competence. The National Gendarmerie shall be open to any Rwandese nationals, irrespective of their ethnic group, region, sex and religion.

7. Each member of the National Gendarmerie should be easily identifiable by the public, by wearing insignias bearing either their name or regimental number, or both. Gendarmes usually wearing civilian clothes, because of their duties, should be able to produce their service cards to prove that they are gendarmes, whenever they are so required while performing their duties.
Members of the National Gendarmerie should be strictly courteous and polite in their relations with the public.
In the fulfilment of their mission, they shall not impose cruel, inhuman and degrading treatment on the public.

8. Members of the National Gendarmerie shall have the right to be informed on the socio-political life of the country. They shall receive civic and political education.

9. Members of the National Gendarmerie shall not be affiliated to political parties or any other association of a political nature. They shall neither take

/...

part in activities or demonstrations of political parties or associations. They shall not portray their political allegiances in public.

10. Members of the National Gendarmerie shall exercise their right to vote. Given the type of the current organization of the National Gendarmerie, however, its members shall not participate in local elections.

11. Members of the National Gendarmerie may stand for political elective posts, on condition that they resign from the Gendarmerie.

ection 2: Size, Structure and Organization.

Sub-Section 1: Size.

rticle 85:

The strength of the National Gendarmerie (Officers, Non-Commissioned Officers, Corporals and Gendarmes) shall be six thousand (6,000) men. The ratio between the various categories shall be 6% for Officers, 24% for Non- Commissioned Officers and 70% for Corporals and Gendarmes.

Sub-Section 2: Structure.

rticle 86:

The National Gendarmerie shall comprise:

1. A Command Council;
2. The Gendarmerie Headquarters;
3. A Security Committee;
4. Territorial Units;
5. Specialized Units;
6. Support and Service Units.

/...

The Organizational Chart of the National Gendarmerie is attached to the present Protocol as a Annex III, and is part and parcel of this Protocol.

Sub-Section 3: Organization of the National Gendarmerie.

Paragraph 1: Command Council of the National Gendarmerie.

Article 87: A Command Council of the National Gendarmerie (C.C.N.G.) is hereby established and shall, within the framework of the policy outlined by the Government, constitute an organ of consultation and decision-making in matters related to the organization and coordination of the activities of the National Gendarmerie. It shall be accountable to the Government through the Minister of Defence.

Article 88: Setting up of the Command Council of the National Gendarmerie.

The Command Council of the National Gendarmerie shall be put in place at the same time as the Transitional Institutions.

Article 89: Composition.

The Command Council of the National Gendarmerie shall be composed of

-The Chief of Staff of National Gendarmerie:	Chairman
-The Deputy Chief of Staff of the National Gendarmerie:	Deputy Chairman
-Commanders of "Groupements" (11):	Members

/...

Article 90: Functions.

The Command Council of the National Gendarmerie shall exercise the following functions:

1. Work out modalities for the implementation of the Government policy with regard to public security in the country;

2. Ensure that the country's public security policy is implemented;

3. Decide, in line with the general policy of the Government, on the doctrine of utilization of the National Gendarmerie, through the establishment of mechanisms and strategies for the maintenance of law and order, and security as well as the best utilization of resources;

4. Establish guidelines for the organization of the supply of logistics;

5. Provide advice, either on its own initiative or upon the request of the Minister of Defence, on policy plans for the maintenance of public and order and security,the overall organization of the National Gendarmerie, the state of service of Gendarmes and any issue of general concern confronting the National Gendarmerie;

6. Ensure efficient organization and administration of the National Gendarmerie;

7. Study major issues confronting the Units and take decisions to be implemented by the National Gendarmerie Headquarters or make recommendations to the Minister of Defence for appropriate action;

/...

8. Supervise the conduct of the process of formation of the National Gendarmerie.

Article 91: Meetings.

The Command Council of the Gendarmerie shall meet once a month in an ordinary session, upon convocation by its Chairman. The Chairman may call for an extraordinary session when and as needed, and especially on instruction from the Minister of Defence, or at the request of anyone of its members. The agenda of the Meeting shall be specified upon notification to attend;

Article 92: Mode of Decision-Making.

Decisions shall be taken by consensus and communicated to the Minister of Defence;

Decisions or recommendations by the Command Council of the National Gendarmerie shall be conveyed to the echelons concerned through the Chief of Staff.

Article 93: Rules of Procedure.

The Command Council of the Gendarmarie shall work own out its own rules of procedure.

Paragraph 2: The National Gendarmerie Headquarters.

Article 94: Missions of the Headquarters.

The Headquarters shall be an organ liaising between the National Gendarmerie, as an Institution, and the Executive power. It shall be responsible for the day-to-day administration and command of the National

/...

Gendarmerie. It shall implement decisions by the Command Council of the National Gendarmerie and coordinate activities of the National Gendarmerie, in accordance with directives issued by the Command Council.

Article 95: Functions of the Headquarters of the National Gendarmerie.

The Headquarters of the National Gendarmerie shall have the following functions:

1. Day-to-day administration and command of the National Gendarmerie;
2. Coordinate activities of the National Gendarmerie;
3. implement decisions by the Command Council of the Gendarmerie and Security Committee;
4. Liaise, at the administrative level, the National Gendarmerie, as an Institution, with the Government, through the Ministry of Defence;
5. Conduct the process of formation of the National Gendarmerie and participate in the demobilization process within the framework of implementing the Peace Agreement, in collaboration with the Neutral International Force and under the supervision of the Command Council of the National Gendarmerie.

Article 96: Command of the National Gendarmerie Headquarters.

The Headquarters shall be under the Command of the Chief of Staff, assisted by the Deputy Chief of Staff.

/...

The Chief of Staff shall be responsible for the National Gendarmerie Headquarters. However, all decisions shall, be taken upon mutual agreement between the Chief of Staff and the Deputy Chief of Staff.
The Deputy Chief of Staff shall especially be responsible for the supervision of activities entrusted to Departments 2 and 3 of the Headquarters. He shall be accountable to the Chief of Staff. He shall replace the Chief of Staff and dispose of all the matters in the event of the latter's absence or impediment.

Article 97: Organization and Functions of the Departments of the National Gendarmerie Headquarters.

The National Gendarmerie Headquarters shall be composed of (four) 4 Departments with the following functions:

1. Department 1 (G1): Management of personnel.

2. Department 2 (G2): Security and intelligence.

   - Security of personnel and equipment of the National Gendarmerie
   - Gathering and use of intelligence relating to the Corps of the National Gendarmerie.

3. Department 3 (G3): Organization, training, education, operations, civic and political education.

   - Work out the doctrine of utilization of the National Gendarmerie;
   - Proposal on the organisational structure and deployment of Units;
   - Education and training;
   - Civic and political education;

/...

- Elaboration of plans for the maintenance of public order and security;
- Planning of daily and periodic activities within the National Gendarmerie.

4. Department 4 (G4): Logistics

- Participation in preparing the budget;
- Providing Units with supplies;
- Management of the National Gendarmerie patrimony.

aragraph 3: **Security Committee of the National Gendarmerie.**

rticle 98: A Security Committee is hereby established and shall constitute, within the framework of the management of internal security, an organ of consultation and decision-making in matters related to internal security within the National Gendarmerie.

rticle 99: **Composition.**

The Security Committee shall be composed of the following:

- The Chief of Staff of the National Gendarmerie:	Chairman
- The Deputy Chief of Staff of the National Gendarmerie:	Deputy Chairman
- The Chief of Criminal Investigation Service:	Member
- The Chief of Specialized Intelligence Service:	Member
- The Commander of the "Groupement" of Kigali City "Prefecture":	Member

/...

Article 100: Functions.

The Security Committee of the National Gendarmerie shall
Study all major issues relating to the Internal Security of the country, and take decisions to be implemented by the National Gendarmerie Headquarters or make recommendations to the Command Council of the National Gendarmerie for appropriate action.

Article 101: Meetings.

The Security Committee of the National Gendarmerie shall meet once a week upon convocation of its Chairman, and when and as needed. The agenda of the meeting shall be specified in the notification to attend.

Paragraph 4: Territorial Units.

Article 102: Principle.

Each "Prefecture" shall have a Territorial Unit of the National Gendarmerie, referred to as "Groupement". The "Groupement" shall be deployed in Territorial Companies and the latter shall be deployed in stations of the National Gendarmerie.

Article 103: Deployment.

The Command Council of the National Gendarmerie shall undertake the deployment of the National Gendarmerie, taking especially into account the prevailing security situation.

/...

In any case, each "Sub-Prefecture" entity, or 3 to 4 "Communes" where there is no such "Sub-Prefecture" entity, shall be served by a Territorial Company.

In a like manner, a permanent station of the Gendarmerie shall be established in each Commune and/or each important rural centre. The Command Council of the National Gendarmerie shall draw a plan for the establishment of those permanent stations .

Paragraph 5: Specialized Units.

Article 104:

The National Gendarmerie shall be composed of the following Specialised Units:

1. A Criminal Investigation Service responsible for criminal investigation and technical police;

2. An Intervention Group to keep watch on sensitive or vital places in the country, intervene in the event of riots and neutralize armed gangs;

3. A Specialized Intelligence Service to gather and make use of intelligence relevant to public order and internal security;

4. A Republican Guard responsible for the security and protection of civilian authorities and personalities in the country and those from abroad. It shall also be responsible for the Guard of honour;

5. A Mobile Brigade responsible for motorized patrols, the pursuit and interception of criminals;

/...

6. A Road Safety Unit to perform traffic police duties;

7. A Unit for the Security of Airports, responsible for the security of Airports, Airports installations and the security of passengers;

8. A Fire Brigade to intervene in the event of fire, disaster and calamity;

9. A Dog Section responsible especially for the detection of drugs and explosives;

10. A Military Police to oversee the observance of discipline by Gendarmes.

Paragraph 6: Support and Service Units.

Article 105:

The National Gendarmerie shall be composed of the following Support Units and Service Units:

1. A General Headquarters Company;

2. A Logistic Services Group ;

3. A Band Unit;

4. Medical Services.

Paragraph 7: School of the National Gendarmerie

Article 106: There is a School of the National Gendarmerie under the Gendarmerie Headquarters (EGENA).

/...

Section 3: Service within the National Gendarmerie.

Sub-Section 1: Terms of Service.

Article 107: Principle.

The service of a gendarme shall be under contract or permanent terms. Men as well as Non-Commissioned Officers with ranks of Sergeant and Staff Sergeant shall be employed under contract terms. The contract shall be valid for seven (7) years renewable once and applicable to the category of gendarmes aged between 18 and 40. Other gendarmes shall be employed under permanent terms.

Article 108: Ranks.

Ranks within the National Gendarmerie shall fall under three categories and follow each other as indicated below:

Category 1: Men.

- Gendarme
- Corporal

Category 2: Non-Commissioned Officers.

- Sergeant
- Staff Sergeant
- Sergeant Major
- Warrant Officer Class I
- Warrant Officer Class II

/...

Category 3: Officers.

1. Junior Officers.

- Second Lieutenant
- Lieutenant
- Captain

2. Senior Officers.

- Major
- Lieutenant-Colonel
- Colonel

3. General Officers.

- Brigadier
- Major-General
- Lieutenant General.

Ranks of "Premier Sergent-Major", "Adjudant Principal" and "Commandant" are abolished. Gendarmes currently holding these ranks shall maintain them until they are promoted to higher ranks. They shall be the last ones to hold them. A new rank of Brigadier is hereby established

rticle 109: Correspondence between Functions and Ranks within the National Gendarmerie.

The correspondence between functions and ranks of Gendarmes shall be as follows:

A. The National Gendarmerie Headquarters.

Functions:	Ranks:
1. Chief of Staff:	Major-General, Brigadier, Colonel.
2. Deputy Chief of Staff:	Major-General, Brigadier, Colonel.
3. Head of Department in the National Gendarmerie Headquarters:	Colonel, Lieutenant-Colonel, Major.
4. Assistant Head of Department in the National Gendarmerie Headquarters:	Colonel, Lieutenant-Colonel, Major, Commandant, Captain.
5. Commander of a Department Section in the National Gendarmerie Headquarters:	Lieutenant-Colonel, Major, Commandant, Captain
6. Deputy Commander of a Department Section in the National Gendarmerie Headquarters:	Major, Commandant, Captain, Lieutenant.
7. Commander of Sub-Section of a Department Section in the National Gendarmerie Headquarters or Staff Officer in the National Gendarmerie:	Captain, Lieutenant, 2nd Lieutenant
8 Units of the National Gendarmerie.	
. Commander of a "Groupement":	Colonel, Lieutenant-Colonel, Major
Commander of the Intervention Group:	Colonel, Lieutenant-Colonel, Major

/...

Commander of the Republican Guard:	Colonel, Lieutenant-Colonel, Major
Second in Command of a "Groupement":	Lieutenant-Colonel, Major, Comman n Captain.
Second in Command of the Intervention Group:	
Second in Command of the Republican Guard:	
Commander of the Logistic Services Group:	
Second in Command of the Logistic Services Group:	Colonel, Lieutenant-Colonel, Major
	Lieutenant-Colonel, Major, Comman n
Chief of Specialized Intelligence Service:	Colonel, Lieutenant Colonel, Major, Commandant.
Deputy Chief of Specialized Intelligence Service:	Lieutenant Colonel, Major, "Comm a Captain.
Head of the Criminal Investigation Service:	Colonel, Lieutenant-Colonel, Major, Commandant.
Assistant Head of Criminal Investigation Service:	Lieutenant-Colonel, Major, Comman n Captain.
Military Police Commander:	Major, Commandant, Captain,

/...

Airport Security Unit Commander:

Road Safety Unit Commander:

Mobile Brigade Commander:

General Headquarters Commander:

Fire Brigade Commander:

10. Assistant Military Police Commander: Commandant, Captain, Lieutenant

Assitant Airport Security Unit Commander:

Assistant Road Safety Unit Commander:
Assistant Mobile Brigade Commander:

Assistant General Headquarters Commander:

Assistant Fire Brigade Commander:

11. Band Company Commander: Commandant, Captain

12. Assistant Band Company Commander: Captain, Lieutenant

13. Commander of the Headquarters Section in: Commandant, Captain, Lieutenant.

- the "Groupement":
- the Intervention Group:
- the Republican Guard:

/...

14.	A Commander of a Company in a battalion or Section Commander of the: - Specialized Intelligence Services: - Criminal Investigation Service, or - Logistic Services Group:	Commandant, Captain, Lieutenant
15.	Second in Command of the Company in a Battalion or Assistant Section Commander of the - Specialized Intelligence Service, - Criminal Investigation Service, - Logistics Service Group:	Commandant, Captain, Lieutenant.
16.	Head of a Department of the Fire Brigade:	Lieutenant, Second Lieutenant.
17.	Dog Section Commander:	Captain, Lieutenant.
18.	Deputy Dog Section Commander:	Lieutenant, Second Lieutenant.
19.	Platoon Commander:	Lieutenant, Second Lieutenant.
20.	Non Commissioned Officer of a "Groupement", Non Commissioned Officer of the Intervention Group,	Warrant Officer Class I, Warrant Officer II, Adjudant Principal.

/...

Non Commissioned Officer of the Republican Guard:

21.	Non-Commissioned Officer of a Company:	Premier Sergent Major , Sergeant Major, Sergeant.
22.	Gendarmerie Station Commander:	Sergeant Major, Staff Sergeant, Sergeant.
23.	Section Commander:	Staff Sergeant, Sergeant.
24.	Assistant Section Commander:	Corporal.
25.	Team Leader:	Corporal.
26.	Judiciary Police Agent:	Corporal, Gendarme.

C. School of the National Gendarmerie (EGENA).

1.	Commander of the School of the National Gendarmerie:	Colonel, Lieutenant-Colonel
2.	Second in Command of the School of the National Gendarmerie:	Lieutenant-Colonel, Major.

D. Other Functions.

In addition to the functions mentioned above, there are other functions within the administrative, logistic and technical services of the National Gendarmerie which may be exercised by gendarmes holding various ranks provided for in the National Gendarmerie.

/...

rticle 110: **Appointment of Members of the Command Council of the National Gendarmerie.**

Members of the Command Council of the National Gendarmerie shall be appointed by the Cabinet, and Orders of their appointment shall be signed by the President of the Republic, in accordance with the provisions of Article 9 of the Protocol of Agreement, signed on 30th October, 1992.

ticle 111: **Appointment of General Officers and Senior Officers and their Promotion to Ranks and Functions.**

General Officers and Senior Officers shall be appointed and promoted to ranks and functions by the Cabinet, upon recommendation of the Command Council of the National Gendarmerie.

Orders of their appointment shall be signed by the President of the Republic, in accordance with the provisions of Article 9 of the Protocol of Agreement signed on 30th October, 1992.

ticle 112: **Appointment of Junior Officers and their Promotion to Ranks and Functions.**

Junior Officers shall be appointed and promoted to ranks and functions by the Cabinet, upon recommendation of the Command Council of the National Gendarmerie. Orders of their appointment shall be signed by the Prime Minister.

/...

rticle 113: Appointment of Non-Commissioned Officers employed under Statutory Terms and their Promotion to Ranks and Functions.

Non-Commissioned Officers shall be appointed and promoted to ranks and functions by the Command Council of the Gendarmerie, meeting under the chairmanship of the Minister of Defence, who will be the one to sign Orders of their appointment.

rticle 114: Employment, Posting and Promotion of Gendarmes Under Contract Terms.

All contracts for gendarmes employed under contract terms shall be signed by the Minister of Defence. To be employed, gendarmes must pass a national competitive examination , supervised by the Command Council of the Gendarmerie. Upon successful completion of the training programme, gendarmes shall be posted in units by the Command Council of the Gendarmerie at the proposal of the National Gendarmerie Headquarters Thereafter, promotions shall be made by the National Gendarmerie Headquarters at the proposal of the Unit Commanders.

rticle 115: Modalities of Promotion.

Modalities for the promotion to ranks shall be decided upon by the Government.
Gendarmes may move from a lower category to an upper category, especially after passing a test organized for that purpose.

rticle 116: Commisssioning.

Conditions and modalities of Commissioning to ranks or functions shall be specified by the Government.

/...

Article 117: Transfers.

Transfers from a Unit or Service to another Unit or Service and which do not affect the powers of appointment vested in other authorities, shall be made by the Chief of Staff upon delegation of powers by the Command Council of the National Gendamerie, and in consultation with the Units Commanders or those in charge of Services.

Transfers within Units and which do not affect the powers of appointment vested in other authorities shall be made by Commanders of those Units and the Chief of Staff shall be informed.

Article 118: Secondment, Detachment and Transfer.

Members of the National Gendarmerie may be seconded, detached or transfered to another Service. The authority vested with the power of appointment to gendarme ranks and functions shall take adequate measures to make available the gendarmes concerned by secondment, detachment or transfer.

Article 119: Termination of Service.

Resignation, leave without pay, dismissal as well as pensioning off shall be decided upon by the authority vested with the power of appointment or promotion.

Article 120: Age of Retirement.

The age of retirement shall be:

- 45 years for Non-Commissioned Officers employed on permanent terms and for Junior Officers;
- 50 years for Senior Officers

/...

- 55 years for General Officers.

Upon reaching the retirement age, gendarmes employed under permanent terms, and exercising specialized functions shall, however, benefit from a service extension and be employed under contract terms. In this case, they cannot expect to be promoted.

ub-Section 2: Disciplinary Regime for the National Gendarmerie, Military Courts and Criminal Investigation and Public Prosecution Department (Auditorat).

aragraph 1: Principles.

rticle 121: Breaches of discipline by gendarmes shall be liable to punishment by disciplinary committees and various echelons of the military hierarchy who inflict disciplinary punishments as provided for.

Violations of penal laws by gendarmes shall be punished by Competent Jurisdictions which pass corresponding sentences provided in the said laws.

Disciplinary punishments and criminal sentences shall entail disciplinary measures affecting the career of gendarmes concerned.

aragaph 2: Disciplinary Punishments.

rticle 122:

Breaches of discipline which, according to the penal laws, fall short of violations shall entail disciplinary punishments. The disciplinary regulations shall specify the conduct of the gendarmes.

Disciplinary punishments shall be aimed at redressing the behaviour of individual gendarmes with a view to maintaining harmony and discipline

/...

within the Units and Services. It shall, therefore, be forbidden to transform disciplinary punishments into a means of harassement.

Article 123: Disciplinary Committees.

Disciplinary Committees within each Unit are hereby set up to decide on breaches of discipline.

Two disciplinary Committees shall be set up at the level of the "Groupement", Specialized Unit, the Support Unit and the General Headquarters Company.

-A Disciplinary Committee composed of Officers to decide on cases involving Officers of the said "Groupement", the Specialized Unit or Support Unit, except those involving Commanders of the said Groupement and Units.

-A Disciplinary Committee composed of Officers, Non-Commissioned Officers,"Corporals" and Gendarmes deployed in the said"Groupement" and Unit.

Decisions taken by this Disciplinary Committee may be heard on appeal before the Disciplinary Committee responsible for deciding on cases involving Officers.

Depending on the size the Unit concerned, however, the Command Council of the National Gendarmerie shall decide whether it is appropriate to set up a Disciplinary Committee to rule on cases involving Officers.

/...

rticle 124: **The Competence of the Command Council of the National Gendarmerie with regard to Discipline.**

The Command Council of the National Gendarmerie shall give its ruling on cases involving "Groupement" Commanders and their Second in Command, Specialized Unit Commanders and their Second in command, and the Support Unit Commanders and their Second in command and the General Headquarters Company Commanders and their Second in Command.

The Command Council of the National Gendarmerie shall also rule on cases of appeals against disciplinary punishments given to Officers by disciplinary Committees of "Groupements", Specialized Units, Support Units, and the General Headquarters Company.

rticle 125: **Appointment of Members of the Disciplinary Committees.**

Members of disciplinary Committees shall be appointed by the Command Council of the National Gendarmerie for an indefinite period. The Command Council of the National Gendarmerie may replace them whenever it deems it appropriate.

Members of disciplinary Committees shall be fully independent in the execution of their duties. They shall independently assess cases referred to them and take decisions without being subjected to any external pressure. They shall not receive any order or injunction, especially from their immediate superiors.

rticle 126: **The Competence of the Military Hierarchy with regard to Discipline.**

Officers responsible for order and discipline within their Units shall be empowered to inflict punishments to defaulting Non-Commissioned

/...

Officers and gendarmes, such as cleaning fatigues: (cleaning of sanitary facilities, etc.); and non exhausting physical exercises: (push-ups, hopping, long- distance running, etc.).

Punishments inflicted by the military hierarchy shall not be recorded in the personal file of the punished gendarme and, therefore, shall not entail disciplinary measures.

Furthermore, Unit Commanders shall have the power of provisional arrest, not exceeding 48 hours, over any defaulting gendarme under their authority. The Disciplinary Committee shall also be a forum to give ruling on appeals against excessive punishments inflicted by the military hierachy.

Article 127: Disciplinary Punishments Applicable to Officers.

1. The Admonition: Written note reprimanding the addressee.

2. Arrests with Access: maximum of 21 days.

   Under such arrests, the party concerned shall be under obligation to be confined within his residence without a possibility of leaving, except : performing his duties, taking his meals and carrying out duties approved by the Command. The punishment decision shall specify whether visitors are allowed or not.

3. Arrests without Access: maximum of 15 days.

   Under such arrests, the party concerned shall be exempted from any services. He shall be suspended from all gendarme duties and forbidden to leave his residence, except for taking his meals, or peforming duties approved by the Command. He shall be formally barred from receiving visitors, except as the service may require. This suspension shall not be taken into account when pension is calculated.

/...

rticle 128: Disciplinary Punishments applicable to Non-Commissioned Officers.

1. Open Arrests: maximum of 21 days.

   This punishment shall not exempt the party concerned from performing his duties. They shall consist in barring the party concerned from leaving the quarters, except for attending to his duty and performing certain tasks approved by the Command, from participating in any collective recreation or attending any entertainment organized within his quarters, or using the Canteen.

2. Close Arrests: maximum 21 days.

   This punishment shall not exempt the party concerned from performing his duties. The party shall be under obligation to stay indoors without a possibility to leave, except to attend to his duties and other tasks approved by the Command. No visitors shall be allowed. In the case of single Non-Commissioned Officers, meals shall be taken to them by those who are on week duty in the camp.

3. Arrests in the Military Prison: maximum of 15 days.

   To be sentenced to military prison shall exempt the party concerned from all duties. The punishments shall consist in continued detention in the cell for the whole duration of the sentence. However, the gendarme serving out such a punishment may be compelled to carry out exercises and work within the quarters; may use whatever time is strictly necessary for carrying out certain duties approved by the Command, and must be subjected to a daily compulsory constitutional walk of 30 minutes.

/...

rticle 129: Disciplinary Punishments Applicable to Men.

1. Open Arrests: maximum of 21 days.

This punishments shall not exempt the party concerned from performing his duties. They shall consist in barring the party concerned from leaving the quarters, except for attending to his duty and performing certain tasks approved by the Command, from participating in any collective recreation or attending any entertainment which may be organized within his quarter, or using the Canteen.

2. Arrests in the Guard House: maximum of 21 days.

The party concerned shall not be exmpted from performing his duties;

He shall be forbidden to leave the quarters, except for performing his duty and performing tasks approved by the Command;

He shall be forbidden to participate in any collective recreation or attend any entertainment which may be organized in the quarters;

He shall be forbidden to go to the canteen and compelled to stay within the guard-house from evening till the reveille on week days, and the whole day on Sundays and public holidays, except when performing duties approved by the Command;

The party concerned shall be compelled to take a constitutional walk of 30 minutes every day, during the period of his confinement.

/...

3. Solitary Confinement: maximum of 15 days.

To be sentenced to solitary confinement shall exempt the party concerned from all duties. The punishment shall consist in continued detention in the cell for the whole duration of the sentence. However, the gendarme serving out such a punishment may be compelled to carry out exercises and work within the quarters; may use whatever time is strictly necessary for carrying out certain duties approved by the Command, and must be subjected to a daily compulsory constitutional walk of 30 minutes.

rticle 130: **Deduction of a 1/4 of the Salary**

Concurrently with disciplinary punishment, gendarmes guilty of failing to maintain, causing the deterioration, loss, theft or total or partial destruction of items or other material belonging to the State may have 1/4 of their salaries deducted until the costs of the damage are defrayed in full.

aragraph 3. **Disciplinary Measures.**

rticle 131: **Principles.**

Any gendarme having been liable to a disciplinary punishment or penalty meted out by a competent Court may be subject to disciplinary measures to be specified by relevant organs.

No disciplinary measure can be inflicted as long as the facts of the case have not been ascertained either by the disciplinary committees, or the Courts.

Disciplinary measures shall constitute a warning and shall entail delay in promotion, removal from office, employment or rank on a temporary or permanent basis.

/...

Disciplinary measures shall be inflicted by the authority vested with the powers of appointment and promotion.

rticle 132: Disciplinary Measures falling under the Competence of the Government.

Disciplinary measures applicable to Officers shall be decided upon by the Cabinet at the proposal of the Command Council of the National Gendarmerie. Relevant Orders shall be signed, as the case may be, either by the President of the Republic or the Prime Minister.

rticle 133: Disciplinary Measures falling under the Competence of the Minister of Defence and the Command Council of the National Gendarmerie.

The Command Council of the National Gendarmerie convening under the chairmanship of the Minister of Defence, shall give its ruling on cases involving Non Commissioned Officers and decide on disciplinary measures to be taken against them.

The Minister of Defence shall sign the Order relating to the disciplinary measures agreed upon.

rticle 134: The Competence of the Gendarmerie Headquarters.

The Gendarmerie Headquarters shall rule on cases involving Corporals and Gendarmes and take the necessary disciplinary measures.

The Chief of Staff shall sign the Orders containing the adopted disciplinary measures taken by the Headquarters. However, the Order containing the disciplinary measure terminating the contract shall be signed by the Minister of Defence.

/...

rticle 135: Disciplinary Measures applicable to Officers.

1. Delay in Promotion.

Disciplinary punishments applicable to Officers of all ranks shall entail the following minimum delays in promotion:

- Three (3) months for one (1) admonition;
- Six (6) months for one (1) punishment consisting in an Arrest with Access;
- Nine (9) months for one (1) punishment consisting in an Arrest without Access.

Any Officer sentenced to a term of imprisonment not exceeding six (6months, shall have his promotion held up for a period between six (6) and twelve (12) months.

2. Suspension from Service.

Any Officer sentenced to a term of imprisonment not exceeding six (6) months shall be suspended from all service for a period corresponding to the duration of the term of his sentence.

3. Automatic Dismissal and Removal from Office.

Any Officer sentenced to a term of imprisonment exceeding six (6) months shall be automatically either dismissed or removed from Office. In any case, he shall be removed from Office, if he was prosecuted and sentenced for a criminal offence.

/...

Article 136: Disciplinary Measures applicable to Non-Commissioned Officers.

1. Delay in Promotion.

Disciplinary punishments applicable to Non-Commissioned Officers of all ranks shall entail the following delays in promotion:

- Three (3) months for a punishment consisting in one (1) close arrest or two (2) open arrests;
- Six (6) months for one (1) punishment consisting in military confinement;
- Nine (9) months for two (2) punishments consisting in military confinement.
- Twelve (12) months for three (3) punishments consisting in military confinement.

Any Non-Commissioned Officer sentenced to a term of imprisonment not exceeding six (6) months, shall have his promotion held up for a period between six (6) and twelve (12) months.

2. Suspension of all Gendarme Duties.

Any Non-Commissioned Officer sentenced to a term of imprisonment not exceeding six (6) months shall be supended from all gendarme duties for a period corresponding to the duration of the term of his sentence.

/...

3. Automatic Dismissal and Removal from Office.

Any Non-Commissioned Officer employed under statutory terms sentenced to a term of imprisonment exceeding six (6) months shall automatically be either dismissed or removed from Office. In any case, he shall be removed from Office if he was sentenced for a criminal offence.

4. Termination of Contract.

The contract shall be terminated for any Non-Commissioned Officer employed under Contract Terms sentenced to a term of imprisonment exceeding six (6) months.

rticle 137: Disciplinary Measures applicable to Men.

1. Delay in Promotion.

Disciplinary punishments applicable to Men of all ranks shall entail the following delays in promotion:

- Three (3) months for one (1) punishment consisting in one (1) arrest in the guardhouse or two (2) open arrests;
- Six (6) months for one (1) punishment consisting in military confinement;
- Nine (9) months for two (2) punishments consisting in military confinement.
- Twelve (12) months for three (3) punishments consisting in military confinement.

/...

Any man sentenced to a term of imprisonment not exceeding six (6) months, shall have his promotion held up for a period ranging between six (6) and twelve (12) months.

These delays shall only be effective after the party concerned has passed a promotion test.

2. Suspension from Service.

Any man sentenced to a term of imprisonment not exceeding six (6) months shall be supended from service for a period corresponding to the duration of the term of his sentence.

3. Termination of Contract.

The contract shall be terminated for any Gendarme or any Corporals sentenced to a term of imprisonment exceeding six (6) months.

Paragraph 4: Committee Responsible for Drafting Regulations of the National Gendarmerie.

Article 138: The Ad Hoc Joint Committee responsible for the drafting of the regulations for the National Gendarmerie referred to in Article 48 of the present Protocol shall be set up to draft rules and regulations of the National Gendarmerie, under the same conditions as specified under that Article

Paragraph 5: Military Courts and Criminal Investigation and Prosecution Department (Auditorat).

Article 139: In criminal matters, Members of the National Gendarmerie shall be heard by Military Courts specified in Article 26 of the Protocol of Agreement of 30th October, 1992.

/...

Article 140: The Court of Cassation shall be empowered to pass penal and first degree judgement on the Chairman and Deputy Chairman of the Command Council of the National Gendarmerie and the General Officers. On appeal, their cases shall be heard by the Supreme Court in the forms specified in Article 27 of the Protocol of 30th October, 1992.

The Military Criminal Investigation and Prosecution Department provided for in Article 49 of the present Protocol shall be empowered to prosecute judgement on offences committed by members of the National Gendarmerie.

Section 4: Formation of the National Gendarmerie.

Article 141: Criteria for the Selection of Members of the National Gendarmerie.

The selection of gendarmes to constitute the National Gendarmerie by each party and those to be demobilized shall be carried out in the Assembly points.
Gendarmes to constitute the National Gendarmerie should meet the following criteria:

1. Officers:

They should:

- be volunteers;
- be serving as Officers;
- be Rwandese Nationals.
- be physically fit, i.e. they should obtain a certificate of physical fitness from a registered physician.
- The war-wounded and handicapped shall, however, remain eligible for the National Gendarmerie service, according to their

/...

specializations, unlike the disabled gendarmes who shall be .....demobilized but assisted. This shall apply to all categories of gendarmes.

- be at least 21 years of age.

2. Non-Commissioned Officers:

They should:

- be volunteers;
- be serving as Non-Commissioned Officers;
- be Rwandese Nationals;
- be physically fit;
- be at least 18 years old.

3. Troops:

They should:

- be volunteers;
- be serving in the Rwandese Armed Forces or in the Rwandese Patriotic Front Forces;
- be Rwandese Nationals
- be physically fit;
- be at least 18 years old.

For all 3 categories of gendarmes, a cross-check shall be made out in case of any doubt concerning personal particulars, as per criteria spelled out above.

/...

rticle 142: Training of the National Gendarmerie.

The joint training shall be organized in three batches of two thousand (2,000) men each. The joint training shall cover a period of ten (10) months, i.e. three months of training per batch, and 2 x 15 days of preparation in between the batches.

The gendarmes who will not be selected for the first batch shall wait for their turn in the gendarmerie camps, which would have been transformed into Assembly points under the supervision of the Neutral International Force.

The Command Council of the National Gendarmerie and the Neutral International Force shall see to it that among the gendarmes who have not yet received joint instruction, there shall not, at any given moment, be more than one thousand, eight hundred (1,800) gendarmes in service throughout the national territory.

These gendarmes on duty shall carry only individual weapons, namely, pistols and rifles. The Broad-Based Transitional Government may, if the need arises, increase this number.

rticle 143: Instructors.

For all the training phases, recourse shall be made to Rwandese instructors provided by the two parties and foreign instructors. The latter shall be provided by countries to be agreed upon by the two parties as well as the Neutral International Force. The number of instructors shall amount to 10% of the number of gendarmes to be trained in each batch.

The joint training of Rwandese instructors shall be undertaken, as much as possible, before the separate training of gendarmes from both parties.

/...

rticle 144: Proportions and Distribution of Posts of Command.

During the establishment of the National Gendarmerie, the proportions and distribution of command posts between the two parties shall abide by the following principles:

1. The Government forces shall contribute 60% and theRPF 40% of the forces for all levels apart from the posts of command described below.

2. In the chain of Command, from the general headquarters of the National Gendarmerie to the level of Groupement, each party shall have a 50% representation for the following posts: Chief of Staff, Deputy Chief of Staff, Heads of Department at the General Headquarters (G1, G2, G3, G4); Commanders and Seconds in Command of Groupement; Heads of Sections at the Groupement Headquarters (S1. S2, S3, S4), Commanders and Seconds in command of Specialized and Support Units, namely: Republican Guard, Intervention Unit, Logistic Services Group, Specialized Intelligence Service and Criminal Investigation Service, and Commander and Second in Command of EGENA.

3. All top posts described above shall be equally shared between the officers of the Rwandese Government and those of the RPF in accordance with the principle of alternation.

   Thus, the Government forces and those of RPF shall provide respectively (6 and 5 or 5 and 6) Commanders of Groupement, (5 and 6 or 6 and 5) Seconds in Command of Groupement, and equal number of Heads of Sections at the Groupement Headquarters and

/...

Seconds in Command of Specialized Units as described above and of EGENA.

However, neither force shall hold at the same time the posts of Commander and Second in Command within the same Unit.

4. Without prejudice to Article 141 of this Protocol, the proportion of the two forces in all the structures of the National Gendarmerie shall be affected by no prerequisite condition in terms of accessibility. Thus, adequate training shall be given to the Gendarmes retained without fulfilling all the necessary requirements, in accordance with the modalities specified by the Command Council of the National Gendarmerie.

5. The post of Chief of Staff of the National Gendarmerie shall be held by the Rwandese Patriotic Front (RPF) and the one of Deputy Chief of Staff by the Government party.

Article 145: Specific Case of Officer Trainees in ESM and Non-Commissioned Officer Trainees in ESO.

The Trainees still following their studies in the Schools of the Armed Forces as well as gendarmes undergoing short-term training abroad shall be considered as active members of the Armed Forces.

The recruitment within the National Gendarmerie shall be frozen until the end of the Transition Period. The Broad-Based Transitional Government may, however, decide, after seeking opinion from the Command Council of the National Gendarmerie to resume admission to the Schools of the Armed Forces before the end of the Transition Period.

/...

Section5: Collaboration between the National Gendarmerie and the Communal Police.

rticle 146: The Communal Police, under the Communal authority shall, in addition to its exclusive functions, assist the National Gendarmerie in the fulfilment of its general mission of maintaining public order and security.

The National Gendarmerie shall assist the Ministry of Interior and Communal Development in the training and retraining of the Communal Police.

At the Communal level, the Commander of the Gendarmerie Station shall supervise the training and daily operations of the Communal Police. However, only the Communal Police shall carry out operations related to the implementation of police regulations enacted by the Local Administrative Authority.

HAPTER III. DEMOBILIZATION PROCESS.

ECTION 1: Principles.

rticle 147: Elements of the two Forces, namely the Rwandese Armed Forces and the RPF Forces which shall not have been retained among the nineteen thousand (19,000) servicemen and gendarmes shall be demobilized.

rticle 148: Each party, i.e. the Coalition Government on the one hand, and the RPF on the other, shall specify those elements among its personnel to be demobilized and make a list of them.

rticle 149: Demobilization is a process begining with the formal publishing of lists of servicemen to be demobilized and ending with the final implementation of the process of integration of the demobilized personnel into civil life, in accordance with the timetable attached to the present Protocol as Annex IV

/...

The publishing of lists shall only take place after the disengagement and verification by the competent organs have been conducted and upon completion of the joint training phase. Servicemen to be demobilized shall remain under the responsibility of the Broad-Based Transitional Government until they have been posted, taking into account their categories.

Article 150: Upon completion of the separate training, elements to be demobilized may be put together in separate Assembly points within the respective zones. The Command Council of the National Gendarmerie shall decide, depending on the circumstances, on the need to put them together, taking especially into account the social administration requirements for the elements to be demobilized.

Article 151: Demobilization shall be a gradual process which shall adapt itself to the programme of integration of each demobilized serviceman, in line with the timetable for the demobilization attached as Annex IV.

Article 152: Upon the completion of the demobilization process, each serviceman/gendarme shall be given a demobilization certificate. This certificate is a document testifying that the holder is an ex-serviceman and he/she is entitled to certain benefits given to war veterans.

The Certificate shall testify that the military or gendarme services are terminated and that the bearer was properly demobilized. Copies of that certificate shall be kept within the Ministry of Defence, the Ministry of Interior and Communal Development as well as the Secretariat of State for Rehabilitation and Social Integration.

/...

A card for ex-servicemen shall also be issued to the demobilized personnel and shall especially bear the following particulars: family name, first name, rank, domicile, a photo, date of birth, certificate number and date of issuance.

Section 2: **Demobilization Modalities.**

Sub-Section 1: **General Conditions.**

Article 153: **Lumpsum Demobilization Allowance.**

Each serviceman/gendarme to be demobilized shall be paid a lumpsum demobilization allowance in constant value of Rwandese Francs, amounting to:

- One hundred thousand (100,000) RWF for Corporals, Privates and Gendarmes.
- Two hundred thousand (200,000) RWF for Non-Commissioned Officers - 2nd Category
- Three hundred thousand (300,000) RWF for Non-Commissioned Officers - 1st Category
- Four hundred thousand (400,000) RWF for Junior Officers
- Five hundred thousand (500,000) RWF for Senior Officers

The Broad-Based Transitional Government shall specify modalities of the distribution of those allowances.

Article 154: **The Invalid and Handicapped.**

The invalid and handicapped whose incapacity to perform their duties shall be testified by a registered physician,shall be paid a monthly invalidity

/...

allowance and the Government shall take charge of the education of all their children in Public or subsidized Private Schools.

ub-Section 2: **Specific Modalities for Demobilization per Categories of the Personnel to be Demobilized.**

rticle 155: The personnel having the means to take care of their own integration into civil life shall be discharged upon completion of usual formalities.

rticle 156: The personnel to be directly absorbed into the civil service shall be demobilized as soon as the absorption capacities of that sector will have been communicated.

rticle 157: The personnel to undergo a short or long training or follow familiarization programmes shall be demobilized as soon as opportunities for their training shall have been confirmed.

rticle 158: The handicapped or invalid shall take advantage of special programmes designed for socio-economic integration. They shall fall under the responsibility of the Secretariat of State for Rehabilitation and Social Integration as soon as possibilities of their integration will have been identified.

rticle 159: The personnel whose integration in the civil life shall be contingent upon integration in the Rwandese society, provided for in the Repatriation Programme shall be under the responsibility of the organs responsible for the implementation of the repatriation programme,as soon as such bodies are in a position to implement those programmes.

rticle 160: The personnel who do not fall under any of the above categories shall be demobilized as soon as the Secretariat of State for Rehabilitation and Social Integration and the competent Organs shall be in a position to make room for job opportunities for them.

/...

ection 3: Follow-up of the Demobilized Personnel.

rticle 161: The issue pertaining to the reserve of the National Army and to the compulsory national service shall be considered by the Broad-Based Transitional Government for appropriate action. The demobilized personnel may, on their own volition, become members of the Reserve.

rticle 162: The Secretariat of State for Rehabilitation and Social Integration shall include a Service responsible for the implementation of the programme of integration of the demobilized personnel in the socio-economic life. It shall also ensure the follow-up of the demobilized personnel after their social integration. The Government shall specify modalities of collaboration between the Secretariat of State for Rehabilitation and Social Integration and other departments concerned with the matters of the demobilized personnel, especially the Ministry of Defence and the Ministry of Labour and Social Affairs.

rticle 163: The Army Command High Council and the Command Council of the National Gendarmerie shall decide whether it is appropriate and on the time for the separation of the personnel selected to constitute the National Army and the National Gendarmerie from those to be demobilized, and shall take into account the administrative facilities required by the social services responsible for the discharge and reintegration of the demobilized personnel.

Done at Arusha on 3rd day of August, 1993 in Both French and English Languages, the French text being the original.

/...

For the Government of the Republic of Rwanda

Dr. GASANA Anastase
Minister of Foreign Affairs and Cooperation

For the Rwandese Patriotic Front

BIZIMUNGU Pasteur
Member of the Executive Committee and Commissioner for Information and Documentation

In the presence of the Representative of the Facilitator

(the United Republic of Tanzania)

Joseph RWEGASIRA
Minister of Foreign Affairs and International Cooperation

In the Presence of the Representative of the Secretary General of OAU

Dr. M. T. MAPURANGA
Assistant Secretary General in charge of Political Affairs

/...

Annexe I

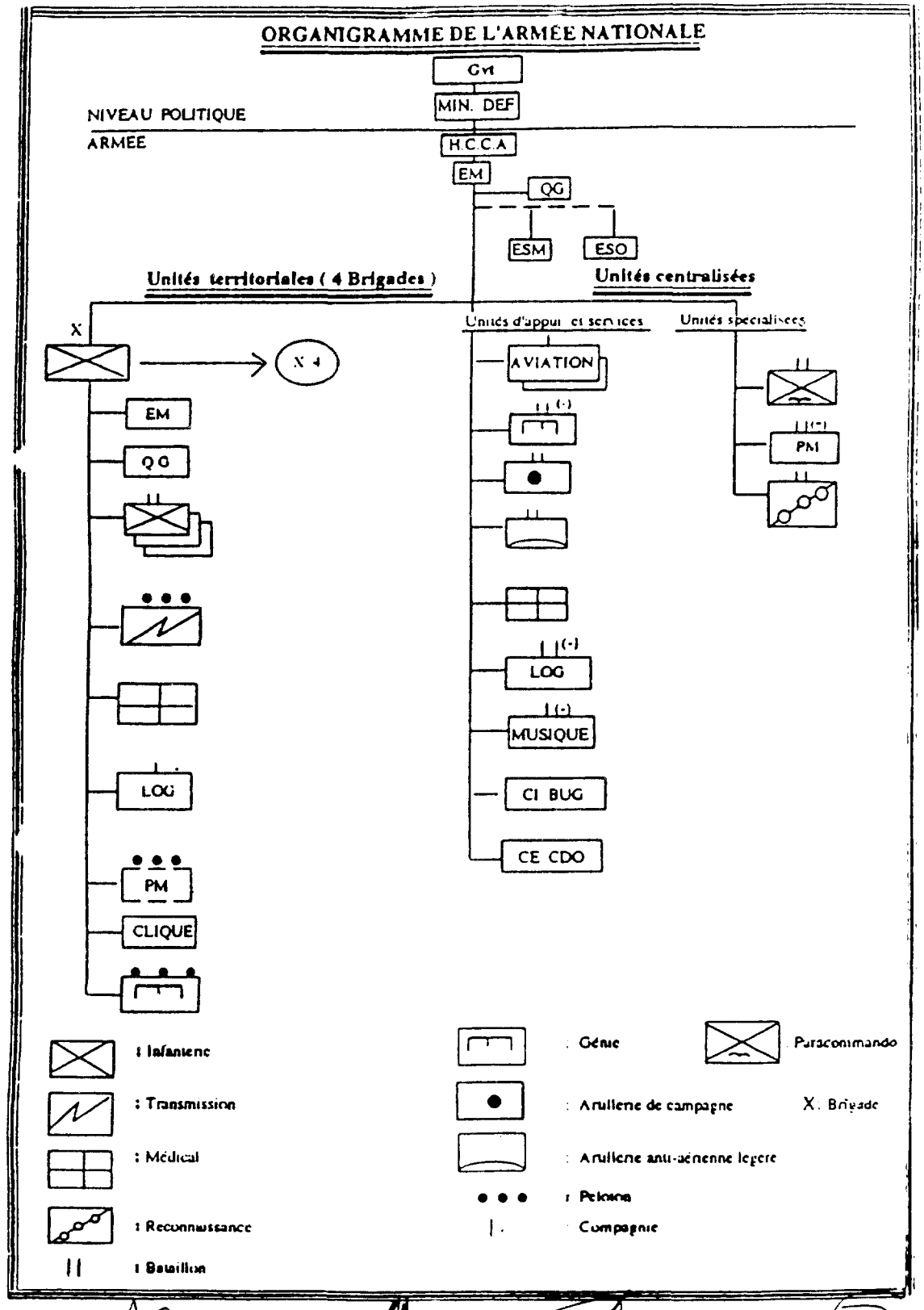
ORGANIGRAMME DE L'ARMÉE NATIONALE
Gvt
MIN. DEF
NIVEAU POLITIQUE
ARMEE
H.C.C.A
EM
QG
ESM
ESO
Unités territoriales (4 Brigades)
Unités centralisées
X
X 4
EM
QG
LOG
PM
CLIQUE
Unités d'appui et services
AVIATION
LOG
MUSIQUE
CI BUG
CE CDO
Unités spécialisées
PM
: Infanterie
: Transmission
: Médical
: Reconnaissance
: Bataillon
: Génie
: Artillerie de campagne
: Artillerie anti-aérienne légère
: Peloton
: Compagnie
: Paracommando
X : Brigade

/...

Annexe II

PROGRAMME ET CALENDRIER D'INSTRUCTION

MOIS / ACTIVITES	-1	1	2	3	4	5	6	7	8	TERMES INDICATIFS DU PROGRAMME DE FORMATION
A. Session d'échanges pour Officiers supérieurs des deux parties.	■	■	■	■	■	■	■	■		SEMINAIRES: Edifier la confiance entre les cadres des Forces des deux parties.
B. Formation des instructeurs rwandais	■									Programme spécifique de formation des instructeurs.
C. Formation séparée pour tous les membres des deux forces belligérantes dans leurs zones respectives.		■								GUERRE: Expliquer les causes et les conséquences de la guerre ainsi que les mécanismes adoptés pour y mettre fin. RECONCILIATION NATIONALE: Identifier les actes et les valeurs pouvant favoriser la réconciliation (unité nationale, respect des lois, de la Loi Fondamentale, des principes démocratiques et ceux de l'Etat de droit). ACTIVITES CULTURELLES ET SPORTIVES: Organiser les activités culturelles et sportives.
D. FORMATION CONJOINTE PAR UNITE: 1. Premier roulement des militaires formant l'Armée Nationale.			■	■						NOTIONS DE DEFENSE DU TERRITOIRE: -Expliquer le bien-fondé d'une Armée Nationale (Menaces, principes de défense, environnement géopolitique...).
2. 2ème roulement.			.....	.....	■	■	■			
3. 3ème roulement.			.....	.....	.....	.....	.....	■	■	ACCORD DE PAIX. -Expliquer la structure, l'organisation et les missions de l'Armée Nationale ainsi que les principes régissant celle-ci.

							-Faire acquérir la déontologie de la vie militaire. -Expliquer les différentes institutions administratives et politiques du pays, respect des lois, de la Constitution, les principes démocratiques et ceux de l'Etat de droit ainsi que le statut d'un militaire dans la mouvance politique (neutralité politique, droits de l'homme,etc.) TECHNIQUES MILITAIRES: Harmoniser les techniques militaires de base (armement, tactique, règlements, etc...). ACTIVITES CULTURELLES ET SPORTIVES.

N.B.: .... Durée d'attente.

Durée d'instruction

Période d'organisation [illegible]aires.

/...

ORGANIGRAMME DE LA GENDARMERIE NATIONALE

Annexe III

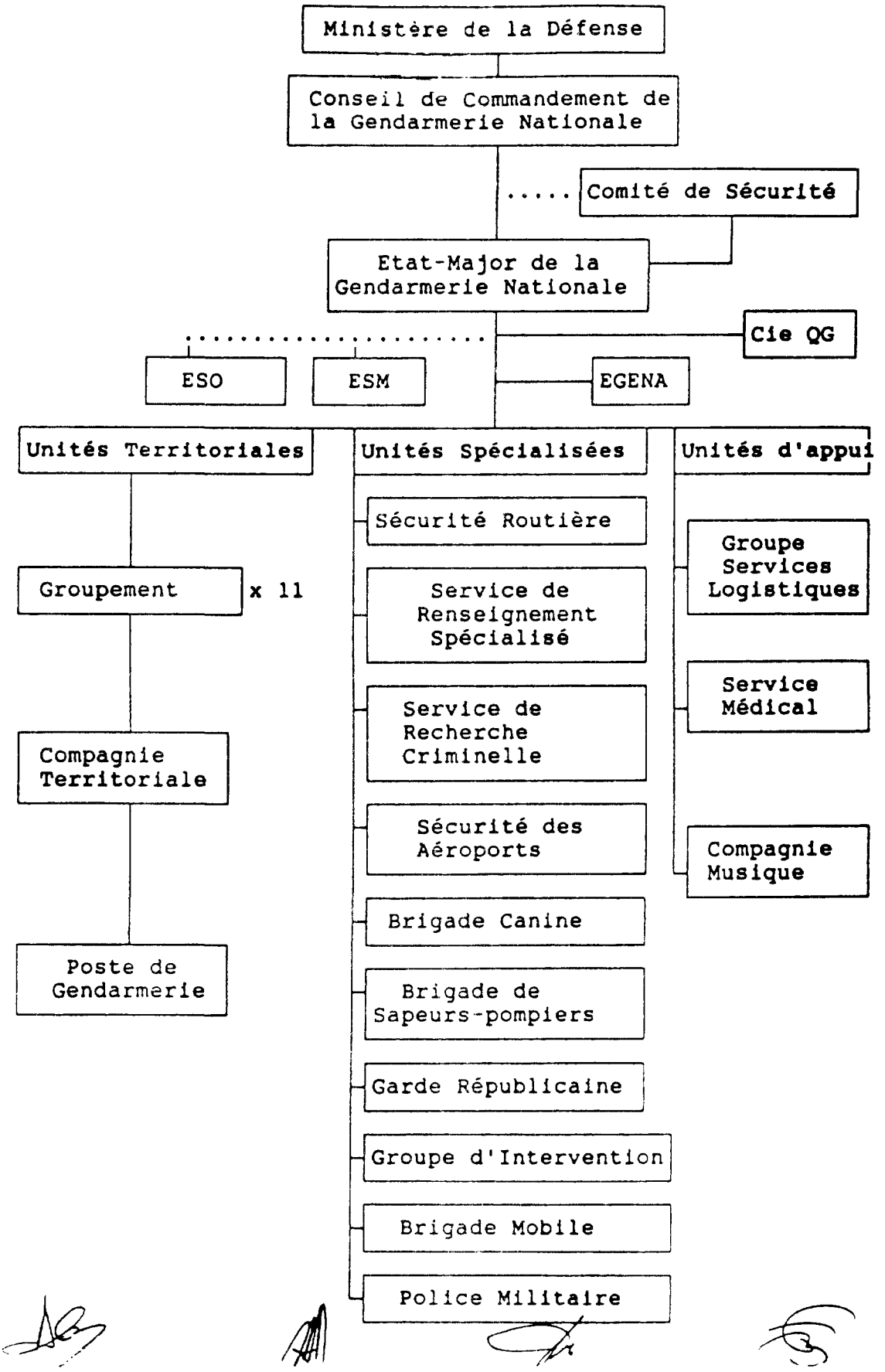

Annexe IV

CALENDRIER DE DEMOBILISATION

MOIS / ACTIVITES	1	2	3	4	5	6	7	8	9	Observations
1.Etablissement dans les points de rassemblement										
2.Actions d'adaptation (sensibilisation, relevé des divers problèmes & collecte d'avis, harmonisation des idées...) préparation d'insertions (2 mois)										N.B.:Organes civils entrent en jeu.
3.Exercice de placement: 3.1 Catégorie de ceux qui sont prêts à être absorbés par la fonction publique et les services para-étatiques										Après l'exercice d'orientation ils peuvent quitter
3.2 Transfert au Secrétariat d'Etat de la catégorie de ceux qui sont prêts à suivre une formation de longue durée.										Après l'exercice d'orientation et de catégorisation leurs cas seront transférés au Secrétariat d'Etat.
3.3 Transfert au Secrétariat d'Etat de la catégorie de ceux qui sont prêts à suivre une formation de courte durée										Idem qu'au point 3.2
3.4 Catégorie de ceux qui sont prêts à quitter le plutôt possible et à se débrouiller.										Après l'exercice de la sensibilisation, ils peuvent quitter.
3.5 Catégorie de ceux qui ne peuvent ni être placés à la fonction publique, ni aller à l'école ni se débrouiller.										Le Secrétariat d'Etat doit dans les six mois qui suivent l'ex. d'orientation et de catégorisation pouvoir placer ces personnes.
3.6 Catégorie des invalides										Idem que 3.5 -centres des handicapés -programmes d'activités -formateurs.
3.7 Catégorie de ceux qui doivent être pris en compte par le programme de rapatriement.										-Dans l'exercice de rapatriement des réfugiés, le Secrétariat d'Etat doit tenir en considération, de manière prioritaire le cas des militaires démobilisés.
4.Octroi du certificat d'ancien combattant et notification au MINADEF, au MININTER, et au SECRETARIAT à la REHAB. et à l'INTERGRATION SOCIALE.										

/...